04-16 cod. 60170477

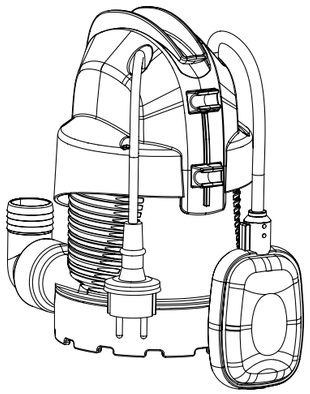

QUICK GUIDE

1

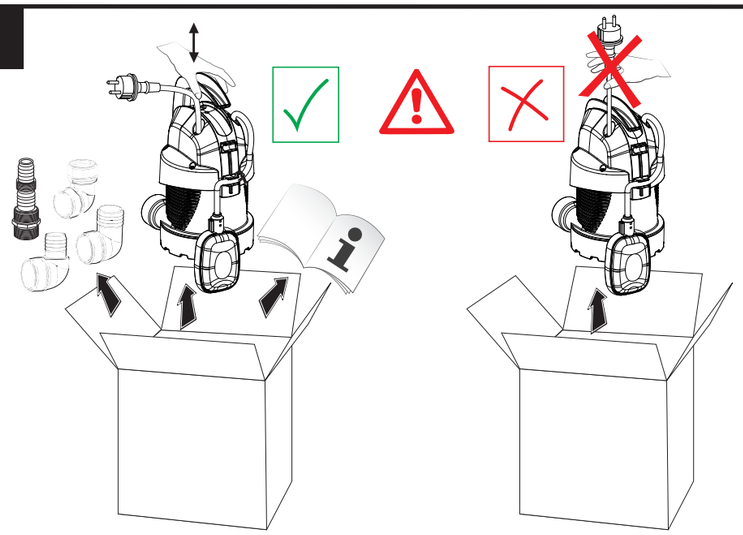

2

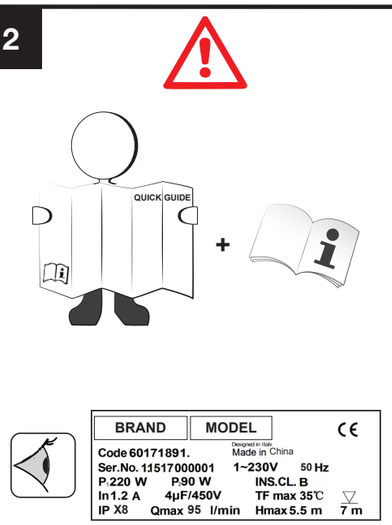

INSTALLATION

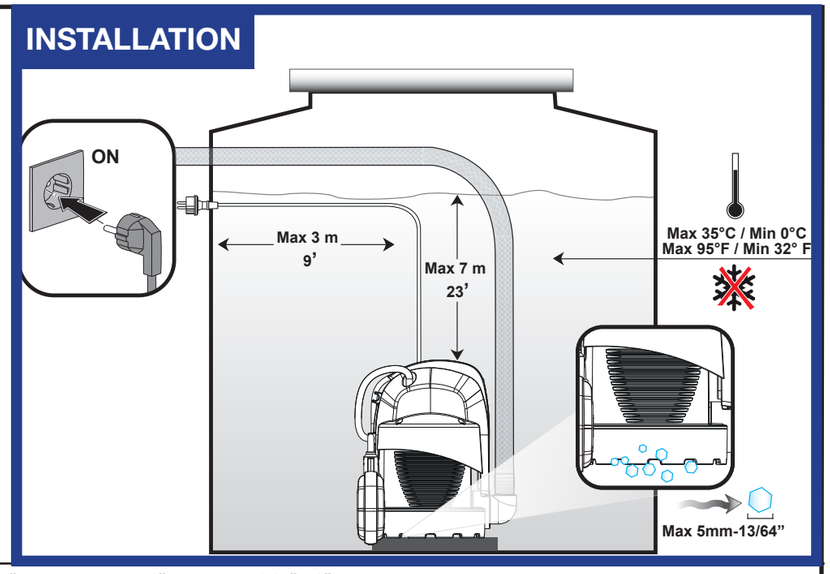

3

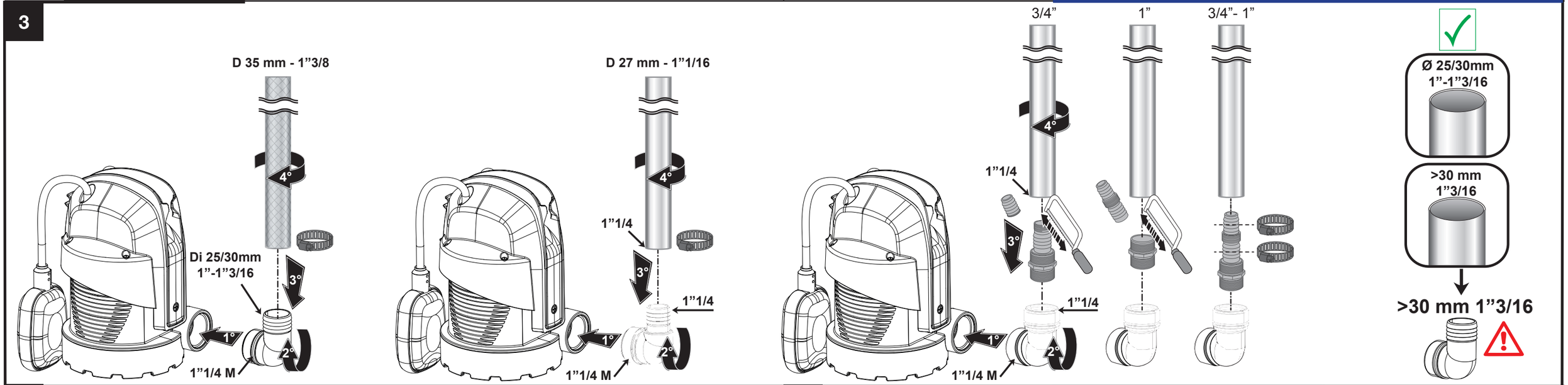

4

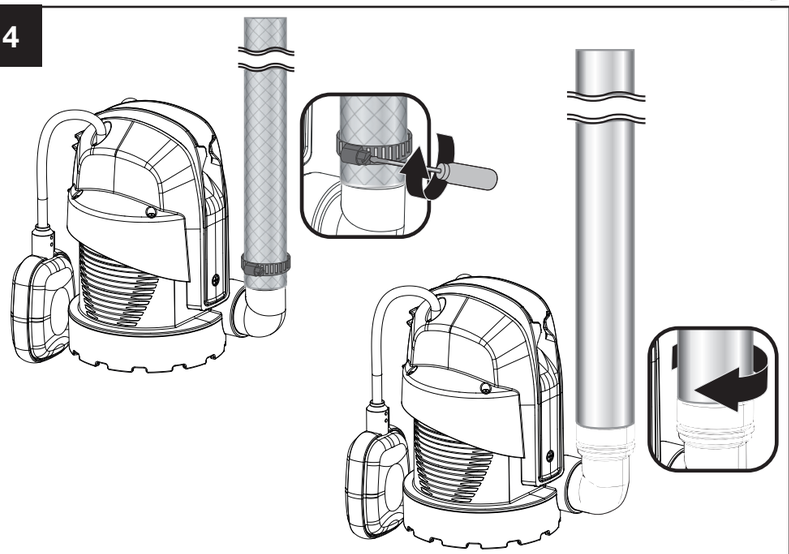

5 MANUAL MODE

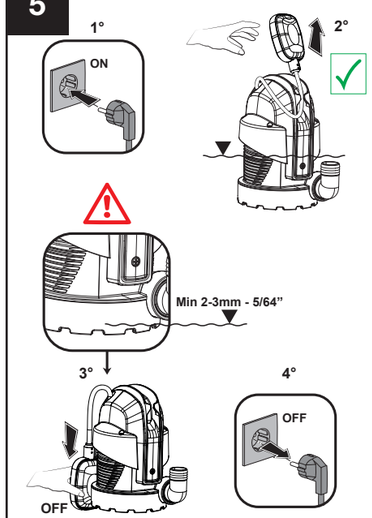

6 AUTOMATIC MODE

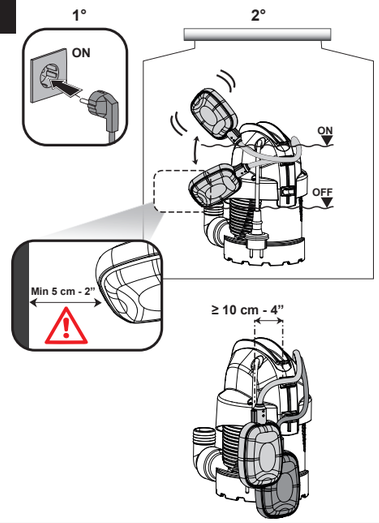
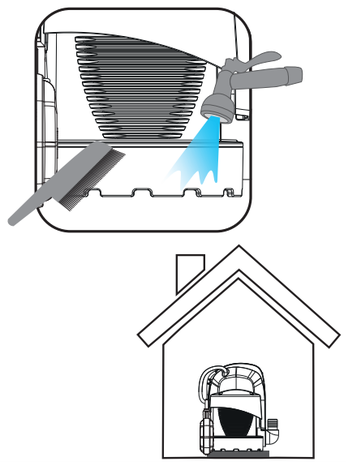
AFTER USE