DOGA

DURAVISION

ESCOBILLAS LIMPIAPARABRISAS
WIPER BLADES
BALAIS ESSUIE-GLACE
WISCHBLÄTTER
SPAZZOLE TERGICRISTALLI
ESCOVAS LIMPA PÁRA-BRISAS

AERODYNAMIC DESIGN

EASY TO FIT

TecDoc
CERTIFIED DATA SUPPLIER

2017

EXPOSITOR - DISPLAY - PRESENTOIR - VERPACKUNG - ESPOSITORE - EXPOSITOR

Expositor de suelo
Capacidad aprox. 136 u.

Floor display
Capacity aprox. 136 u.

Présentoir sur pied
Quantité approx. 136 u.

Boden Verkaufsdisplay
Kapazität ca. 136 Stück

Espositore da pavimento.
Capacità 136 u. aprox.

Exposição de assoalho.
Capacidade aprox. 136 uns.

Expositor de cartón
Capacidad aprox. 40-60 u.

Cardboard display
Capacity aprox. 40-60 u.

Présentoir carton
Quantité approx. 40-60 u.

Karton Verkaufsdisplay
Kapazität ca. 40-60 Stück

Espositore cartone.
Capacità 40-60 u. aprox.

Expositor de papelão.
Capacidade aprox. 40-60 uns.

Expositor de pared
Capacidad aprox. 80 u.

Wall display
Capacity aprox. 80 u.

Présentoir mural
Quantité approx. 80 u.

Wand Verkaufsdisplay
Kapazität ca. 80 Stück

Espositore a parete
Capacità 80 u. aprox.

Exposição de parede.
Capacidade aprox. 80 uns.

ESCOBILLAS LIMPIAPARABRISAS DURAVISION

Escobillas limpiaparabrisas de excelente rendimiento para una máxima visibilidad en la conducción.

Caucho de formulación exclusiva y preparado para resistir las inclemencias meteorológicas.

Perfil de goma diseñado para lograr una presión constante y uniforme que proporciona un barrido eficaz y silencioso.

Instalación rápida y sencilla.

DURAVISION WIPER BLADES

High performance wiper blades for a perfect visibility across the windshield while driving.

Exclusively formulated rubber specially designed to resist all weather conditions.

Specially-cut rubber blade offers a continuous and uniform pressure distribution in a smoother wiping.

Quick and easy mounting.

ESSUIE-GLACES DURAVISION

Balais d'essuie-glaces désignés pour un rendement optimum et une visibilité parfaite pendant la conduite.

Gomme/Caoutchouc de formulation exclusive prête à résister aux conditions météorologiques défavorables.

Profil de gomme/caoutchouc conçu pour obtenir une pression constante et uniforme qui fournit un balayage efficace et silencieux.

Montage facile et simple.

WISCHBLÄTTER DURAVISION

Wischblätter exzellenter Leistung für maximale Sicht bei der Fahrt.

Exklusive Gummi-Mischung für alle metereologischen Bedingungen.

Gummiprofil speziell entworfen für einen konstanten und gleichmässigen Druck, um ein effizientes und leises Wischen sicher zu stellen.

Schnelle und einfache Montage.

SPAZZOLE TERGICRISTALLI DURAVISION

Spazzola lavacristalli di eccellente rendimento per una massima visibilità nella guida.

Gomma di formulazione esclusiva, preparata per resistere alle intemperie.

Profilo in gomma disegnato per ottenere una precisione costante e uniforme, che da una pulizia del vetro efficace e silenziosa

Installazione rapida e facile.

ESCOVAS LIMPA PÁRA-BRISAS DURAVISION

Escovas limpa pára-brisas de excelente rendimento para uma máxima visibilidade na condução.

Borracha de formulação exclusiva e preparada para resistir às inclemências meteorológicas.

Perfil de borracha desenhado para obter uma pressão constante e uniforme que proporciona um deslizamento eficaz e silencioso.

Instalação rápida e simples.

DURAVISION

DURAVISION FLEX

DURAVISION rear

EMBALAJE CÓMODO Y SOSTENIBLE

Embalaje en cartón reciclable.
Cajas fácilmente apilables
Descripción clara del contenido.
Fácil identificación en lineal o apiladas.
Instrucciones gráficas de montaje o en vídeo.
Regla lateral para consultar medidas en pulgadas o cm.
Código de barras.

PRACTICAL AND SUSTAINABLE PACKAGING

Recyclable cardboard packaging.
Pilable boxes.
Clear content description.
Easy reference identification on the shelf.
Detailed mounting pictograms or video instructions.
Metric/Inch ruler to measure wiper blade length.
Bar code.

EMBALLAGE PRATIQUE ET DURABLE

Matériaux d'emballage recyclable.
Boîtes empilables.
Description clair du contenu.
Identification facile de la référence.
Instructions du montage en photo ou en vidéo.
Règle pour mesurer les balais en pouces ou en cm.
Codes barres.

PRAKTISCHE UND NACHHALTIGE VERPACKUNG

Wierderverwertbare Kartonage.
Leicht zu stapelnde Kartons.
Klare Beschreibung des Inhalts.
Einfache Identifikation sowohl in Reihe als auch gestapelt.
Montageanleitung mit Bildern oder Videos.
Seitliche Messleiste für Massangaben in cm oder Zoll.
Barcode.

INBALLO COMODO E SOSTENIBLE

Imballo in cartone riciclabile.
Scatole facilmente impilabili.
Descrizione del contenuto chiara.
Facile identificazione del codice sia in esporitore che a scaffale.
Istruzioni grafiche di montaggio o in video.
Metro laterale per verificare la misura.
Codice a barre.

EMBALAGEM CÓMODA E SUSTENTÁVEL

Embalagem em cartão reciclável
Caixas para sobreposição fácil.
Descrição clara do conteúdo.
Fácil identificação em linha ou sobreposição.
Instruções gráficas de montagem ou em vídeo.
Régua lateral para consultar medidas.
Código de barras.

DOGA

DOGA

ÍNDICE - INDEX - INHALTSVERZEICHNIS - INDICE

DURAVISION 6

GAMA Y INSTRUCCIONES
RANGE AND ASSEMBLY
GAMME ET MONTAGE
REIHE UND MONTAGEM
GAMMA E MONTAGGIO
GAMA E MONTAGEM

> 7

> 31

DURAVISION 31

DURAVISION FLEX 43

DURAVISION rear 58

SÍMBOLOS - SYMBOLS - SYMBOLES - ZEICHENERKLÄRUNGEN - SIMBOLI - SÍMBOLOS

TURISMOS
PASSENGER CARS
TOURISMES
PKW'S
AUTOVETTURE
TURISMOS

DERIVADOS DE TURISMO
SPECIAL TYPES
DERIVES DU TOURISME
MODELLVARIANTEN
FURGONI
VEÍCULOS COMERCIAIS

FECHAS FABRICACIÓN VEHÍCULO
VEHICLE MANUFACTURE DATE
DATE FABRICATION VEHICULE
MODELLJAHR
DATA DI FABBRICAZIONE
DATA DE FABRICAÇÃO

LADO CONDUCTOR
DRIVER'S SIDE
CÔTE CONDUCTEUR
FAHRERSEITE
LATO GUIDA
LADO CONDUTOR

LADO ACOMPAÑANTE
PASSENGER'S SIDE
CÔTE PASSAGER
BEIFAHRERSEITE
LATO PASSEGGERO
LADO PASSAGEIRO

LIMPIA-CRISTAL POSTERIOR
REAR WINDOW WIPER BLADE
BALAI D'ESSUIE-GLACE ARRIERE
HECKWISCHBLÄTTER
TERGICRISTALLO POSTERIORE
ESCOVA DE TRAS

ADAPTADOR
ADAPTER
ADAPTATEUR
ADAPTER
ADATTATORE
ADAPTADOR

NO PRECISA ADAPTADOR
ADAPTER NOT NECESSARY
SANS ADAPTATEUR
KEIN ADAPTER NOTWENDIG
SENZA ADATTATORE
SEM ADAPTADOR

DOGA

DURAVISION

GAMA - RANGE - GAMME - REIHE - GAMMA - GAMA

DURAVISION

WIPER BLADE			HOOK ADAPTORS 8 x 3 H1	9 x 2,5 9 x 3 9 x 4 H8	12 x 4 H12	KIT
DV28	280mm	11"	●	●		
DV35	350mm	14"		●		
DV40	400mm	16"	●	●		
DV45	450mm	18"	●	●		133
DV48	480mm	19"		●		
DV50	500mm	20"		●		
DV53	530mm	21"		●		
DV55	550mm	22"		●		136
DV60	600mm	24"		●		133 136
DV65	650mm	26"		●		133 136
DV70	700mm	28"		●	●	

DURAVISION FLEX

WIPER BLADE			2	3	4	HOOK ADAPTORS 9x4 5	6	7	7 x 2.5 1+B6	9 x 2,5 9 x 3 9 x 4 1+U10	KIT
DVF35	350mm	14"	●	●	●	●	●		●	●	
DVF38	380mm	15"	●	●	●	●	●		●	●	
DVF40	400mm	16"	●	●	●	●	●		●	●	
DVF43	430mm	17"	●	●	●	●	●		●	●	
DVF45	450mm	18"	●	●	●	●	●		●	●	133
DVF48	480mm	19"	●	●	●	●	●		●	●	
DVF50	500mm	20"	●	●	●	●	●		●	●	
DVF53	530mm	21"	●	●	●	●	●		●	●	
DVF55	550mm	22"	●	●	●	●	●	●	●	●	136
DVF58	580mm	23"	●	●	●	●	●		●	●	
DVF60	600mm	24"	●	●	●	●	●		●	●	133 136
DVF65	650mm	26"	●	●	●	●	●		●	●	133 136
DVF70	700mm	28"	●	●	●	●	●		●	●	
DVF75	750mm	28"	2S1	2S2	2S2	2S3					
DVF80	800mm	28"	2S1	2S2	2S2	2S3					

DURAVISION rear

WIPER BLADE		
DVr30	300mm	12"
DVr35	350mm	14"
DVr40	400mm	16"

DOGA

MONTAJE - ASSEMBLY - MONTAGE - MONTAGEM - MONTAGGIO - MONTAGE

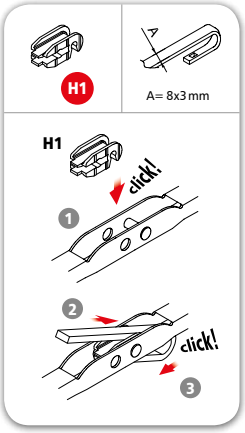

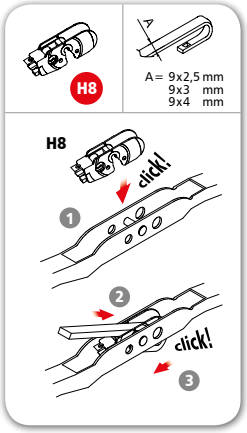

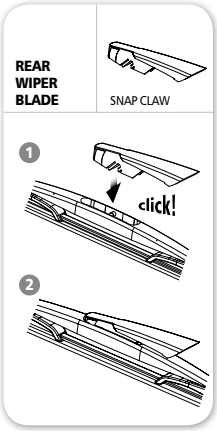

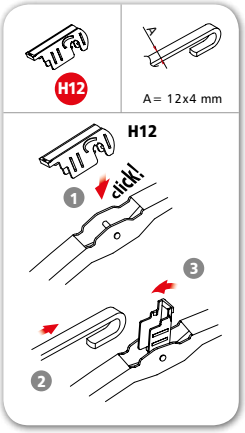

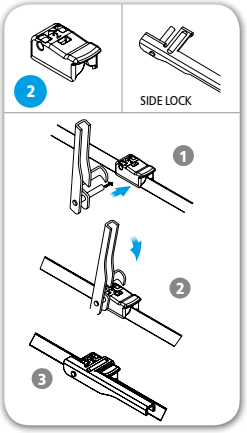

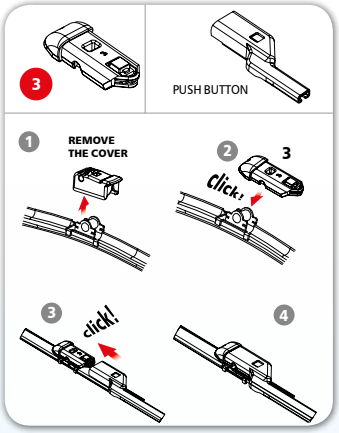

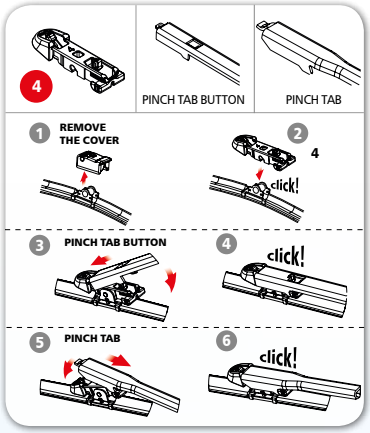

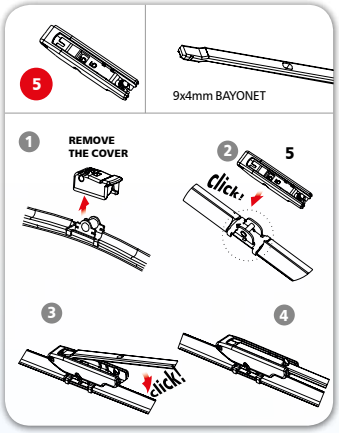

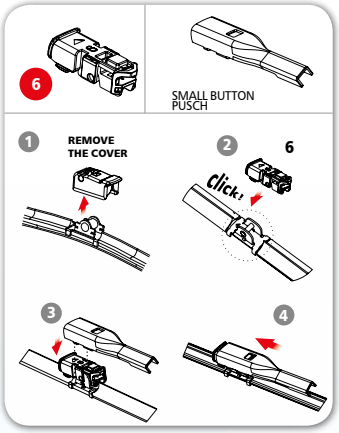

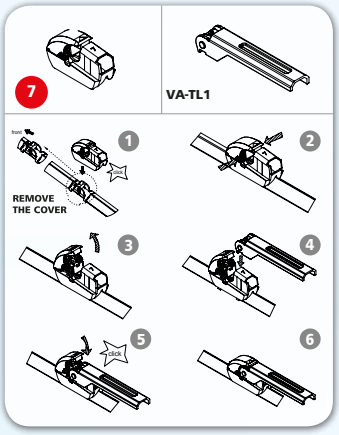

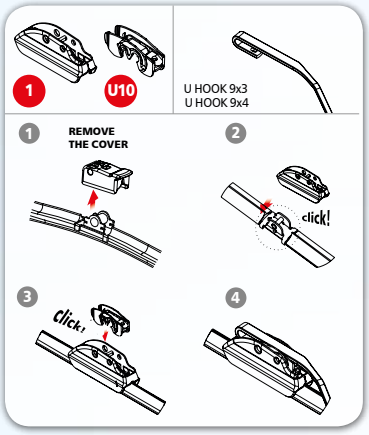

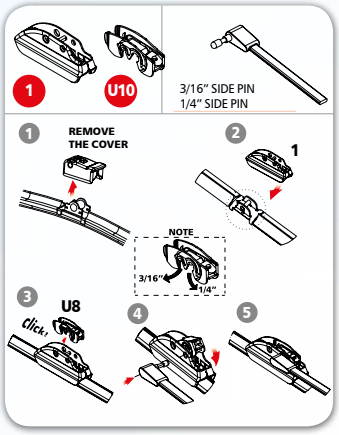

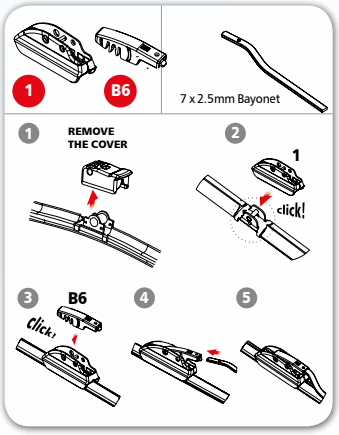

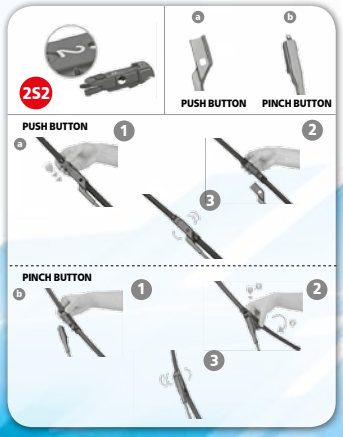

			DURAVISION						DURAVISION FLEX						DURAVISION rear
ALFA ROMEO															
6	79		DV45	H8	DV45	H8			DVF45	1+U10	DVF45	1+U10			
33	84	92	DV45	H8	DV45	H8	DV40	H8	DVF45	1+U10	DVF45	1+U10	DVF40	1+U10	
33	93		DV48	H8	DV48	H8			DVF48	1+U10	DVF48	1+U10			
33 Sportwagon	83		DV45	H8	DV45	H8	DV40	H8	DVF45	1+U10	DVF45	1+U10	DVF40	1+U10	
75	86		DV45	H8	DV45	H8			DVF45	1+U10	DVF45	1+U10			
90	84		DV45	H8	DV45	H8			DVF45	1+U10	DVF45	1+U10			
145	95	10.00	DV55	H8	DV48	H8			DVF55	1+U10	DVF48	1+U10			
146	95		DV55	H8	DV48	H8			DVF55	1+U10	DVF48	1+U10			
147	1.06								DVF55	2	DVF40	2			
155	4.92		DV53	H8	DV48	H8			DVF53	1+U10	DVF48	1+U10			
156	1.97		DV55	H8	DV53	H8			DVF55	1+U10	DVF53	1+U10			
156 SW	5.00		DV55	H8	DV50	H8			DVF55	1+U10	DVF50	1+U10			
159	9.05								DVF58	2	DVF45	2			
159 Sportwagon	4.06								DVF58	2	DVF45	2			
164	89		DV53	H8	DV53	H8			DVF53	1+U10	DVF53	1+U10			
166	10.98		DV53	H8	DV48	H8			DVF53	1+U10	DVF48	1+U10			
Alfasud	72	83							DVF40	1+B6	DVF40	1+B6			
Alfasud Sprint	83		DV40	H8	DV40	H8			DVF40	1+U10	DVF40	1+U10			
Alfetta	81		DV40	H8	DV40	H8			DVF40	1+U10	DVF40	1+U10			
Brera	1.06								DVF55	2	DVF45	2			
Giulietta	77	85	DV40	H8	DV40	H8			DVF40	1+U10	DVF40	1+U10			
Giulietta	4.10								DVF58	3	DVF45	3			
GTV	74	87	DV40	H8	DV40	H8			DVF40	1+U10	DVF40	1+U10			
GTV	9.94		DV55	H8	DV50	H8									
Mito	9.08								DVF60	4	DVF40	4			
Spider	71	4.95	DV40	H8	DV40	H8			DVF40	1+U10	DVF40	1+U10			
Spider	5.95	9.06	DV55	H8	DV50	H8									
Spider	9.06								DVF55	2	DVF45	2			
SZ Zagato	89		DV50	H8	DV50	H8			DVF50	1+U10	DVF50	1+U10			
ASTON MARTIN															
Cignet	4.11		DV55	H8	DV45	H8			DVF55	1+U10	DVF45	1+U10			
DB7	95		DV53	H8	DV53	H8			DVF53	1+U10	DVF53	1+U10			
DB9	1.04		DV60	H8	DV50	H8			DVF60	1+U10	DVF50	1+U10			
DBS	9.07		DV60	H8	DV50	H8			DVF60	1+U10	DVF50	1+U10			
Rapide	3.10		DV60	H8	DV50	H8			DVF60	1+U10	DVF50	1+U10			
AUDI															
50	74		DV40	H8	DV40	H8			DVF40	1+U10	DVF40	1+U10			
80	72	78	DV40	H8	DV40	H8			DVF40	1+U10	DVF40	1+U10			
80	83		DV53	H8	DV53	H8	DV40	H8	DVF53	1+U10	DVF53	1+U10	DVF40	1+U10	
90	85		DV50	H8	DV50	H8			DVF50	1+U10	DVF50	1+U10			
100	82	88	DV50	H8	DV50	H8	DV45	H8	DVF50	1+U10	DVF50	1+U10	DVF45	1+U10	
100	89		DV55	H8	DV55	H8			DVF55	1+U10	DVF55	1+U10			
200	83		DV50	H8	DV50	H8			DVF50	1+U10	DVF50	1+U10			
A 2	2.00	01	DV70	H12											
A 2	10.01	05							DVF75	2S2					
A 3	9.96	5.03	DV53	H8	DV48	H8	DV40	H8	DVF53	1+U10	DVF48	1+U10	DVF40	1+U10	
A 3	5.03	11.04							DVF60	2	DVF48	2			
A 3	11.04	4.12							DVF60	4	DVF48	4			
A 3	4.12								DVF65	6	DVF48	6			
A 3 Cabrio	4.08								DVF60	4	DVF48	4			
A 3 Sportback	10.04	9.12							DVF60	4	DVF48	4			
A 3 Sportback	9.12								DVF65	6	DVF45	6			
A 4	1.95	97	DV53	H8	DV50	H8			DVF53	1+U10	DVF50	1+U10			
A 4	97	11.00	DV53	H8	DV50	H8	DV40	H8	DVF53	1+U10	DVF50	1+U10	DVF40	1+U10	
A 4 (8E2;B6)	02	11							DVF55	7	DVF55	7			
A 4 (8E3;B7)	04	08							DVF55	7	DVF55	7			
A 4 (8K2/8K5)	11.07								DVF60	6	DVF50	6			
A 4 Avant	95	97	DV53	H8	DV50	H8			DVF53	1+U10	DVF50	1+U10			
A 4 Avant	97	01	DV53	H8	DV50	H8	DV40	H8	DVF53	1+U10	DVF50	1+U10	DVF40	1+U10	
A 4 Avant (8E5;B6)	03	04							DVF55	7	DVF55	7			
A 4 Avant (8ED;B7)	04	08							DVF55	7	DVF55	7			
A 4 Avant	11.07								DVF60	6	DVF50	6			
A 4 Cabrio (8H7;B6)	03	05							DVF55	7	DVF55	7			
A 4 Cabrio (8HE;B7)	05	09							DVF55	7	DVF55	7			

● = *montar con KIT 133 - mount with KIT 133 - monter avec le KIT 133 - mit KIT 133 montieren - montare con KIT 133 - montar com KIT 133*
■ = *montar con KIT 136 - mount with KIT 136 - monter avec le KIT 136 - mit KIT 136 montieren - montare con KIT 136 - montar com KIT 136*

			DURAVISION						DURAVISION FLEX						DURAVISION rear
A 5	07								DVF60	6	DVF50	6			
A 5 Sportback	5.09								DVF60	6	DVF50	6			
A 6	6.94	2.97	DV55	H8	DV53	H8			DVF55	1+U10	DVF53	1+U10			
A 6	2.97	8.01	DV55	H8	DV55	H8			DVF55	1+U10	DVF55	1+U10			
A 6 (4B2;C5)	01	04							DVF55	7	DVF55	7			
A 6	11.10								DVF65	6	DVF53	6			
A 6 Avant	6.94	12.97	DV55	H8	DV53	H8	DV45	H8	DVF55	1+U10	DVF53	1+U10	DVF45	1+U10	
A 6 Avant	12.97	8.01	DV55	H8	DV55	H8	DV40	H8	DVF55	1+U10	DVF55	1+U10	DVF40	1+U10	
A 6 Avant (4B5;C5)	01	05							DVF55	7	DVF55	7			
A 6 Avant	5.11								DVF65	6	DVF53	6			
A 7 Sportback	7.10								DVF60	6	DVF53	6			
A 8	6.94	1.01	DV53	H8	DV53	H8			DVF53	1+U10	DVF53	1+U10			
A 8	1.01	11.02							DVF53	2	DVF53	2			
Cabriolet	5.95		DV55	H8	DV55	H8			DVF55	1+U10	DVF55	1+U10			
Coupe	89		DV55	H8	DV55	H8	DV55	H8	DVF55	1+U10	DVF55	1+U10	DVF55	1+U10	
Coupe GT	80	83	DV45	H8	DV45	H8	DV45	H8	DVF45	1+U10	DVF45	1+U10	DVF45	1+U10	
Coupe GT	83	89	DV50	H8	DV50	H8	DV48	H8	DVF50	1+U10	DVF50	1+U10	DVF48	1+U10	
Q 3	6.11								DVF60	6	DVF53	6			
Q 5	11.08								DVF60	6	DVF50	6			
Q 7	3.06								DVF65	4	DVF65	4			
Quattro	80	83	DV45	H8	DV45	H8	DV45	H8	DVF45	1+U10	DVF45	1+U10	DVF45	1+U10	
Quattro	83		DV50	H8	DV50	H8	DV48	H8	DVF50	1+U10	DVF50	1+U10	DVF48	1+U10	
RS 4 (8ED;B7)	05	08							DVF55	7	DVF55	7			
RS 4 Avant (8ED;B7)	06	08							DVF55	7	DVF55	7			
RS 4 Cabrio (8HE;B7)	06	08							DVF55	7	DVF55	7			
S 2 Avant	5.95		DV53	H8	DV53	H8	DV40	H8	DVF53	1+U10	DVF53	1+U10	DVF40	1+U10	
S 2	91		DV50	H8	DV50	H8			DVF50	1+U10	DVF50	1+U10			
S 3	11.12								DVF65	6	DVF45	6			
S 4	91		DV50	H8	DV50	H8			DVF50	1+U10	DVF50	1+U10			
S 4 (8E2;B6)	02	11							DVF55	7	DVF55	7			
S 4 (8E3;B7)	04	08							DVF55	7	DVF55	7			
S 4 Avant (8E5;B6)	03	04							DVF55	7	DVF55	7			
S 4 Avant (8ED;B7)	04	08							DVF55	7	DVF55	7			
S 4 Cabrio (8H7;B6)	03	05							DVF55	7	DVF55	7			
S 4 Cabrio (8HE;B7)	05	09							DVF55	7	DVF55	7			
S 6	5.95		DV55	H8	DV55	H8			DVF55	1+U10	DVF55	1+U10			
S 6	11.03								DVF55	7	DVF55	7			
S 8	9.97		DV55	H8	DV55	H8			DVF55	1+U10	DVF55	1+U10			
TT	11.98	8.03	DV53	H8	DV53	H8			DVF53	1+U10	DVF53	1+U10			
TT	8.03	10.06							DVF53	2	DVF53	2			
TT	10.06								DVF55	4	DVF53	4			
TT Roadster	11.98	8.03	DV53	H8	DV53	H8			DVF53	1+U10	DVF53	1+U10			
TT Roadster	8.03	2.07							DVF53	2	DVF53	2			
TT Roadster	2.07								DVF55	4	DVF53	4			
V 8	91		DV50	H8	DV50	H8			DVF50	1+U10	DVF50	1+U10			
AUSTIN															
Maestro	84		DV50	H8	DV50	H8	DV45	H1	DVF50	1+U10	DVF50	1+U10			
Metro	85		DV40	H1	DV40	H1	DV28	H1							
Montego	84		DV50	H8	DV50	H8			DVF50	1+U10	DVF50	1+U10			
AUTOBIANCHI															
Y 10	85	92	DV45	H8					DVF45	1+U10			DVF35	1+B6	
BMC															
Megastar	04		DV65	H8	DV60	H8			DVF65	1+U10	DVF60	1+U10			
BMW															
Compact (E46)	6.01		DV53	H8	DV50	H8	DV45	H8	DVF53	1+U10	DVF50	1+U10	DVF45	1+U10	
M 3 (E30)	86	4.91	DV50	H8	DV50	H8			DVF50	1+U10	DVF50	1+U10			
M 3 (E36)	4.91	00	DV53	H8	DV50	H8			DVF53	1+U10	DVF50	1+U10			
M 3 Cabrio (E36)	95		DV55	H8	DV50	H8			DVF55	1+U10	DVF50	1+U10			
M 6	84		DV45	H8	DV45	H8			DVF45	1+U10	DVF45	1+U10			
Serie 1 (E81, E87)	9.04	6.11							DVF50	4	DVF50	4			
Serie 1 (F20, F21)	6.11								DVF55	4	DVF45	4			
Serie 1 Cabrio (E88)	3.08								DVF50	4	DVF50	4			
Serie 1 Coupe (E82)	10.07								DVF50	4	DVF50	4			
Serie 3 (E21)	79	83	DV45	H8	DV45	H8			DVF45	1+U10	DVF45	1+U10			
Serie 3 (E30)	83	91	DV50	H8	DV50	H8			DVF50	1+U10	DVF50	1+U10			
Serie 3 (E36)	91	2.98	DV53	H8	DV50	H8			DVF53	1+U10	DVF50	1+U10			
Serie 3 (E46)	2.98	1.05	DV55	H8	DV50	H8			DVF55	1+U10	DVF50	1+U10			
Serie 3 (E90)	1.05	1.10							DVF60	2	DVF48	2			
Serie 3 (E90)	1.10	10.11							DVF60	4	DVF48	4			

● = *montar con KIT 133 - mount with KIT 133 - monter avec le KIT 133 - mit KIT 133 montieren - montare con KIT 133 - montar com KIT 133*

■ = *montar con KIT 136 - mount with KIT 136 - monter avec le KIT 136 - mit KIT 136 montieren - montare con KIT 136 - montar com KIT 136*

Serie 3 (F30)	10.11								DVF60	4	DVF48	4		
Serie 3 Cabrio	4.00	3.07	DV53	H8	DV53	H8			DVF53	1+U10	DVF53	1+U10		
Serie 3 Cabrio (E93)	3.07	1.10							DVF60	2	DVF45	2		
Serie 3 Cabrio (E93)	1.10								DVF60	4	DVF45	4		
Serie 3 Compact (E36)	95	6.01	DV50	H8	DV50	H8	DV45	H1	DVF50	1+U10	DVF50	1+U10		
Serie 3 Coupe (E46)	4.99	6.06	DV55	H8	DV50	H8			DVF58	1+U10	DVF50	1+U10		
Serie 3 Coupe (E92)	6.06	1.10							DVF60	2	DVF45	2		
Serie 3 Coupe (E92)	1.10								DVF60	4	DVF45	4		
Serie 3 GT	2.13								DVF60	4	DVF48	4		
Serie 3 Touring (E30)	82	95	DV50	H8	DV50	H8	DV45	*	DVF50	1+U10	DVF50	1+U10	DVF45	*
Serie 3 Touring (E36)	95	00	DV53	H8	DV50	H8	DV28	H8	DVF53	1+U10	DVF50	1+U10		
Serie 3 Touring (E46)	00	9.05	DV55	H8	DV50	H8			DVF55	1+U10	DVF50	1+U10		
Serie 3 Touring (E91)	9.05	1.10							DVF60	2	DVF48	2		
Serie 3 Touring (E91)	1.10	6.12							DVF60	4	DVF48	4		
Serie 3 Touring (F31)	6.12								DVF60	4	DVF48	4		
Serie 5 (E28)	4.79	2.88	DV45	H8	DV45	H8			DVF45	1+U10	DVF45	1+U10		
Serie 5 (E60)	7.03	3.10							DVF60	4	DVF58	4		
Serie 5 GT (F07)	10.09								DVF65	2	DVF45	2		
Serie 5 (F10)	3.10								DVF65	2	DVF45	2		
Serie 5 Touring (E61)	6.04	9.10							DVF60	4	DVF58	4		
Serie 5 Touring (F11)	9.10								DVF65	2	DVF45	2		
Serie 6 (E24)	79	93	DV45	H8	DV45	H8			DVF45	1+U10	DVF45	1+U10		
Serie 6 Cabrio	6.04	6.11							DVF60	4	DVF58	4		
Serie 6 Cabrio	6.11								DVF65	2	DVF40	2		
Serie 6 Coupe	2.04	11.10							DVF60	4	DVF58	4		
Serie 6 Coupe	6.11								DVF65	2	DVF40	2		
Serie 6 Csi	84		DV45	H8	DV45	H8			DVF45	1+U10	DVF45	1+U10		
Serie 6 Gran Coupe	6.11								DVF65	2	DVF40	2		
Serie 7 (E23)	79	86	DV45	H8	DV45	H8			DVF45	1+U10	DVF45	1+U10		
Serie 7 (E66)	7.08								DVF65	2	DVF48	2		
X1	10.09								DVF60	4	DVF45	4		
X3	1.04	9.10	DV55	H8	DV50	H8			DVF55	1+U10	DVF50	1+U10		
X3	9.10								DVF65	2	DVF50	2		
X5	5.00	2.07	DV60	H8	DV55	H8	DV45	H8	DVF60	1+U10	DVF55	1+U10	DVF45	1+U10
X5	2.07	4.12							DVF60	2	DVF50	2		
X5	4.12								DVF60	3	DVF50	3		
X6	5.08	3.12							DVF60	2	DVF50	2		
X6	3.12								DVF60	3	DVF50	3		
Z1	89		DV50	H8	DV50	H8			DVF50	1+U10	DVF50	1+U10		
Z3	10.95		DV50	H8	DV50	H8			DVF50	1+U10	DVF50	1+U10		
Z3 Coupe	7.97		DV50	H8	DV50	H8			DVF50	1+U10	DVF50	1+U10		
Z4	4.03	5.09	DV53	H8	DV50	H8			DVF53	1+U10	DVF50	1+U10		
Z4	5.09		DV55	H8	DV55	H8			DVF55	1+U10	DVF55	1+U10		
CADILLAC														
ATS	2.13		DV55	H8	DV45	H8			DVF55	1+U10	DVF45	1+U10		
BLS	4.06		DV55	H8	DV55	H8			DVF55	1+U10	DVF55	1+U10		
BLS Wagon	12.07								DVF58	4	DVF58	4		
CTS	4.03	1.08	DV55	H8	DV53	H8			DVF55	1+U10	DVF53	1+U10		
CTS	1.08		DV55	H8	DV48	H8			DVF55	1+U10	DVF48	1+U10		
CTS Wagon	1.08		DV55	H8	DV48	H8			DVF55	1+U10	DVF48	1+U10		
Escalade	10.06		DV55	H8	DV55	H8	DV40	H8	DVF55	1+U10	DVF55	1+U10	DVF40	1+U10
Seville	98		DV55	H8	DV55	H8			DVF55	1+U10	DVF55	1+U10		
SRX	10.04	1.09	DV55	H8	DV53	H8	DV28	H8	DVF55	1+U10	DVF53	1+U10		
SRX	1.09								DVF65	3	DVF40	3		
STS	3.05								DVF58	4	DVF53	4		
CHATENET														
Stella	4		DV50	H8			DV28	H8	DVF50	1+U10				
CHEVROLET														
Alero	3.99		DV55	H8	DV40	H8			DVF55	1+U10	DVF40	1+U10		
Aveo (3/5dr)	4.08	3.11	DV55	H8	DV40	H8	DV28	H8	DVF55	1+U10	DVF40	1+U10		
Aveo (4dr)	1.06	3.11	DV55	H8	DV40	H8			DVF55	1+U10	DVF40	1+U10		
Aveo (4/5dr)	3.11								DVF65	4	DVF38	4		
Blazer	2.98		DV50	H8	DV50	H8			DVF50	1+U10	DVF50	1+U10		
Blazer trail	9.01		DV55	H8	DV55	H8	DV40	H8	DVF55	1+U10	DVF55	1+U10	DVF40	1+U10
Camaro	1.11		DV60	H8	DV53	H8			DVF60	1+U10	DVF53	1+U10		
Captiva	7.06		DV60	H8	DV40	H8			DVF60	1+U10	DVF40	1+U10		
Corvette	9.97	2.05	DV55	H8	DV55	H8			DVF55	1+U10	DVF55	1+U10		
Corvette Cabrio	9.97	5.05	DV55	H8	DV55	H8			DVF55	1+U10	DVF55	1+U10		
Cruze (4dr)	5.09		DV60	H8	DV45	H8			DVF60	1+U10	DVF45	1+U10		
Cruze (5dr)	6.11		DV60	H8	DV45	H8			DVF60	1+U10	DVF45	1+U10		

● = *montar con KIT 133 - mount with KIT 133 - monter avec le KIT 133 - mit KIT 133 montieren - montare con KIT 133 - montar com KIT 133*
■ = *montar con KIT 136 - mount with KIT 136 - monter avec le KIT 136 - mit KIT 136 montieren - montare con KIT 136 - montar com KIT 136*

			DURAVISION						DURAVISION FLEX						DURAVISION rear
Cruze SW	8.12		DV60	H8	DV45	H8			DVF60	1+U10	DVF45	1+U10			
Epica	6.06		DV55	H8	DV50	H8			DVF55	1+U10	DVF50	1+U10			
HHR	10.07		DV45	H8	DV45	H8			DVF45	1+U10	DVF45	1+U10			
Malibu	1.12		DV60	H8	DV48	H8			DVF60	1+U10	DVF48	1+U10			
Matiz	4.05		DV55	H8	DV35	H8			DVF55	1+U10	DVF35	1+U10			
Nubira SW	11.04		DV55	H8	DV48	H8			DVF55	1+U10	DVF48	1+U10			
Orlando	12.10		DV60	H8	DV48	H8			DVF60	1+U10	DVF48	1+U10			
Spark	3.10		DV55	H8	DV35	H8			DVF58	1+U10	DVF38	1+U10			
Tahoe	12.99		DV55	H8	DV55	H8	DV40	H8	DVF55	1+U10	DVF55	1+U10	DVF40	1+U10	
Trail Blazer	9.01		DV55	H8	DV55	H8	DV40	H8	DVF55	1+U10	DVF55	1+U10	DVF40	1+U10	
Trax	12.12								DVF65	3	DVF35	3			
Volt	11.11								DVF65	3	DVF65	3			
Trans Sport	2.98		DV60	H8	DV60	H8	DV40	H8	DVF60	1+U10	DVF60	1+U10	DVF40	1+U10	
CHRYSLER															
300 C	7.04		DV55	H8	DV55	H8			DVF55	1+U10	DVF55	1+U10			
300 C SW	11.04		DV55	H8	DV55	H8			DVF55	1+U10	DVF55	1+U10			
300 M	10.98	97	DV60	H8	DV55	H8			DVF60	1+U10	DVF55	1+U10			
Crossfire	11.03		DV50	H8	DV53	H8			DVF50	1+U10	DVF53	1+U10			
Le Baron	93		DV45	H8	DV45	H8			DVF45	1+U10	DVF45	1+U10			
Neon	11.94	4.99	DV50	H8	DV45	H8			DVF50	1+U10	DVF45	1+U10			
Neon	5.99		DV55	H8	DV48	H8			DVF55	1+U10	DVF48	1+U10			
PT Cruiser Convertible	5.04		DV50	H8	DV53	H8			DVF50	1+U10	DVF53	1+U10			
Saratoga	93		DV45	H8	DV45	H8			DVF45	1+U10	DVF45	1+U10			
Sebring	4.01	7.07	DV55	H8	DV55	H8			DVF55	1+U10	DVF55	1+U10			
Sebring	7.07		DV60	H8	DV55	H8			DVF60	1+U10	DVF55	1+U10			
Sebring Cabrio	4.01	7.07	DV55	H8	DV55	H8			DVF55	1+U10	DVF55	1+U10			
Sebring Cabrio	7.07		DV60	H8	DV55	H8			DVF60	1+U10	DVF55	1+U10			
Stratus	96		DV55	H8	DV55	H8			DVF55	1+U10	DVF55	1+U10			
Grand Voyager	1.96	10.07	DV70	H8	DV70	H8	DV40	H8	DVF70	1+U10	DVF70	1+U10	DVF40	1+U10	
Grand Voyager	10.07		DV60	H8	DV50	H8			DVF60	1+U10	DVF50	1+U10			DVR40
PT Cruiser	6.00		DV50	H8	DV53	H8	DV40	H8	DVF50	1+U10	DVF53	1+U10	DVF40	1+U10	
Voyager	91	12.95	DV55	H8	DV45	H8			DVF55	1+U10	DVF45	1+U10			
Voyager	1.96		DV70	H8	DV70	H8	DV40	H8	DVF70	1+U10	DVF70	1+U10	DVF40	1+U10	
CITROËN															
AX	86	4.95	DV55	H8			DV40	H8/H1	DVF55	1+U10			DVF40	1+U10	
AX	5.95		DV55	H8			DV40	H8	DVF55	1+U10			DVF40	1+U10	
Berlingo Combi	4.08								DVF65	3	DVF40	3			DVR35
BX	83		DV50	H8	DV50	H8	DV48	H8	DVF50	1+U10	DVF50	1+U10	DVF48	1+U10	
C1	6.05		DV65	H8					DVF65	1+U10					DVR30
C2	9.03		DV60	H8	DV45	H8			DVF60	1+U10	DVF45	1+U10			
C3	5.02	11.09	DV60	H8	DV45	H8			DVF60	1+U10	DVF45	1+U10			DVR35
C3	11.09								DVF65	5	DVF40	5			
C3 Picasso	2.09	4.10							DVF65	3	DVF40	3			
C3 Picasso	4.10								DVF65	5	DVF40	5			
C4	11.09								DVF75	2S2	DVF65	3			
C4 (5dr)	12.04	11.09							DVF70	4	DVF60	4			
C4 Aircross	4.12		DV60	H8	DV53	H8			DVF60	1+U10	DVF53	1+U10			
C4 Coupe	12.04	11.09							DVF70	4	DVF60	4			
C4 Grand Picasso	2.07	3.08							DVF80	2S1	DVF75	2S1			
C4 Grand Picasso	3.08	5.13							DVF80	2S3	DVF75	2S3			
C4 Grand Picasso	5.13								DVF80	2S2	DVF75	2S2			
C4 Picasso	2.07	3.08							DVF80	2S1	DVF75	2S1			
C4 Picasso	3.08	5.13							DVF80	2S3	DVF75	2S3			
C4 Picasso	5.13								DVF80	2S2	DVF75	2S2			
C4 Sedán	11.08								DVF70	4	DVF60	4			
C5	3.01	10.04	DV65	H8	DV48	H8			DVF65	1+U10	DVF48	1+U10			
C5	10.04								DVF65	2	DVF45	2			
C5 Break	6.01	10.04	DV65	H8	DV48	H8			DVF65	1+U10	DVF48	1+U10			
C5 Break	10.04								DVF65	2	DVF45	2			
C6	12.05								DVF70	2	DVF70	2			
C8	9.02														DVR30
C-Crosser	2.07		DV60	H8	DV53	H8			DVF60	1+U10	DVF53	1+U10			
C-Elysée	11.12								DVF60	5	DVF40	5			
CX	74		DV60	H8			DV40	H8	DVF60	1+U10			DVF40	1+U10	
C-Zero	10.10		DV70	H8					DVF70	1+U10					
DS3	11.09								DVF60	5	DVF40	5			
DS3 Cabrio	3.13								DVF60	5	DVF40	5			

● = *montar con KIT 133 - mount with KIT 133 - monter avec le KIT 133 - mit KIT 133 montieren - montare con KIT 133 - montar com KIT 133*
■ = *montar con KIT 136 - mount with KIT 136 - monter avec le KIT 136 - mit KIT 136 montieren - montare con KIT 136 - montar com KIT 136*

DS4	4.11								DVF75	2S2	DVF65	3			
DS5	11.11								DVF75	2S2	DVF60	3			
Evasión	95		DV65	H8	DV50	H8	DV40	H8	DVF65	1+U10	DVF50	1+U10	DVF40	1+U10	
GS / GSA / GSX	75		DV40	H8	DV40	H8	DV40	H8	DVF40	1+U10	DVF40	1+U10	DVF40	1+U10	
LN / LNA	76		DV28	H8	DV28	H8	DV28	H8							
Nemo	2.08								DVF65	5	DVF45	5			
Pluriel	5.03		DV55	H8	DV45	H8			DVF55	1+U10	DVF45	1+U10			
Saxo	4.96		DV50	H8	DV45	H8	DV40	H8	DVF50	1+U10	DVF45	1+U10	DVF40	1+U10	DVR35
Visa	78		DV48	H8			DV48	H8	DVF48	1+U10			DVF48	1+U10	
Visa 2	78		DV48	H8			DV48	H8	DVF48	1+U10			DVF48	1+U10	
Xantia	4.93	8.97	DV60	H8	DV50	H8			DVF60	1+U10	DVF50	1+U10			
Xantia II	9.97		DV60	H8	DV48	H8			DVF60	1+U10	DVF48	1+U10			
Xantia II Familiar	9.97		DV60	H8	DV48	H8	DV40	H8	DVF60	1+U10	DVF48	1+U10	DVF40	1+U10	DVR35
XM	90		DV55	H8	DV55	H8	DV45	H8	DVF55	1+U10	DVF55	1+U10	DVF45	1+U10	
Xsara	9.97		DV55	H8	DV50	H8	DV45	H8	DVF55	1+U10	DVF50	1+U10	DVF45	1+U10	
Xsara Picasso	12.99	10.05	DV65	H8	DV65	H8			DVF65	1+U10	DVF65	1+U10			DVR40
Xsara Picasso	10.05								DVF65	2	DVF65	2			
ZX	4.91		DV55	H8			DV45	H8	DVF55	1+U10			DVF45	1+U10	
Berlingo	9.96	4.08	DV55	H8	DV55	H8	DV40	H8	DVF55	1+U10	DVF55	1+U10	DVF40	1+U10	
Berlingo van	9.96	4.08	DV55	H8	DV55	H8	DV35	H8	DVF55	1+U10	DVF55	1+U10	DVF35	1+U10	
Berlingo van	4.08								DVF65	3	DVF40	3			
C15	84		DV48	H8					DVF48	1+U10					
C25	9.81		DV50	H8	DV50	H8			DVF50	1+U10	DVF50	1+U10			
C35	9.81		DV50	H8	DV50	H8			DVF50	1+U10	DVF50	1+U10			
Jumper	5.95	4.06	DV55	H8	DV55	H8			DVF55	1+U10	DVF55	1+U10			
Jumper	4.06								DVF65	3	DVF55	3			
Jumpy	6.94	1.07	DV65	H8	DV50	H8			DVF65	1+U10	DVF50	1+U10			
Jumpy	1.07		DV65	H8	DV50	H8			DVF65	1+U10	DVF50	1+U10			DVR35
CORVETTE															
C6 Convertible	5.05		DV53	H8	DV53	H8			DVF53	1+U10	DVF53	1+U10			
C6 Coupe	11.04		DV53	H8	DV53	H8			DVF53	1+U10	DVF53	1+U10			
Z06	2.05		DV53	H8	DV53	H8			DVF53	1+U10	DVF53	1+U10			
DACIA															
Dokker	11.12		DV55	H8	DV40	H8			DVF55	1+U10	DVF40	1+U10			
Duster	4.10		DV50	H8	DV50	H8			DVF50	1+U10	DVF50	1+U10			
Lodgy	3.12		DV55	H8	DV40	H8			DVF55	1+U10	DVF40	1+U10			
Logan	6.05	11.12	DV50	H8	DV50	H8			DVF50	1+U10	DVF50	1+U10			
Logan	11.12		DV55	H8	DV50	H8			DVF55	1+U10	DVF50	1+U10			
Logan Break	2.07	3.13	DV50	H8	DV50	H8			DVF50	1+U10	DVF50	1+U10			DVR35
Logan MCV	3.13		DV55	H8	DV50	H8			DVF55	1+U10	DVF50	1+U10			
Sandero	6.08	4.13	DV50	H8	DV50	H8			DVF50	1+U10	DVF50	1+U10			DVR40
Sandero	4.13		DV55	H8	DV50	H8			DVF55	1+U10	DVF50	1+U10			
DAEWOO															
Aranos	95		DV45	H8	DV45	H8			DVF45	1+U10	DVF45	1+U10			
Compact	5.97		DV50	H8	DV50	H8	DV45	H8	DVF50	1+U10	DVF50	1+U10	DVF45	1+U10	
Evanda	12.02		DV55	H8	DV50	H8			DVF55	1+U10	DVF50	1+U10			
Kalos	11.02		DV55	H8	DV40	H8			DVF55	1+U10	DVF40	1+U10			
Lacetti	2.04		DV55	H8	DV48	H8	DV45	H8	DVF55	1+U10	DVF48	1+U10	DVF45	1+U10	
Lanos	6.97		DV48	H8	DV48	H8	DV48	H8	DVF48	1+U10	DVF48	1+U10	DVF48	1+U10	
Leganza	10.97		DV55	H8	DV48	H8			DVF55	1+U10	DVF48	1+U10			
Matiz	9.98		DV53	H8	DV40	H8	DV35	H8	DVF53	1+U10	DVF40	1+U10	DVF35	1+U10	
Nexia	95		DV45	H8	DV45	H8	DV45	H8	DVF45	1+U10	DVF45	1+U10	DVF45	1+U10	
Nubira	9.97	6.03	DV50	H8	DV50	H8			DVF50	1+U10	DVF50	1+U10			
Nubira	6.03		DV55	H8	DV48	H8			DVF55	1+U10	DVF48	1+U10			
Nubira Wagon	5.97	11.04	DV50	H8	DV50	H8	DV40	H8	DVF50	1+U10	DVF50	1+U10	DVF40	1+U10	
Tacuma	10.00		DV60	H8	DV48	H8	DV40	H8	DVF60	1+U10	DVF48	1+U10	DVF40	1+U10	
DAIHATSU															
Charmant	78	82							DVF35	1+B6	DVF35	1+B6			
Charade	93		DV48	H8	DV45	H8	DV40	H8	DVF48	1+U10	DVF45	1+U10	DVF40	1+U10	
F 20 Taft	78								DVF40	1+B6	DVF40	1+B6			
Terios	4.97	7.06	DV50	H8	DV28	H8	DV28	H8							
Terios	7.06		DV53	H8	DV45	H8			DVF53	1+U10	DVF45	1+U10			
Hijet	95		DV40	H8	DV28	H8									
DE LOREAN															
DCM 12	80		DV50	H8	DV50	H8			DVF50	1+U10	DVF50	1+U10			

● = *montar con KIT 133 - mount with KIT 133 - monter avec le KIT 133 - mit KIT 133 montieren - montare con KIT 133 - montar com KIT 133*
■ = *montar con KIT 136 - mount with KIT 136 - monter avec le KIT 136 - mit KIT 136 montieren - montare con KIT 136 - montar com KIT 136*

			DURAVISION						DURAVISION FLEX						DURAVISION rear
DODGE															
Avenger	6.07		DV60	H8	DV55	H8			DVF60	1+U10	DVF55	1+U10			
Caliber	6.06		DV60	H8	DV40	H8	DV28	H8	DVF60	1+U10	DVF43	1+U10			
Charger	1.12		DV60	H8	DV50	H8			DVF60	1+U10	DVF50	1+U10			
Durango	1.11		DV55	H8	DV53	H8			DVF55	1+U10	DVF53	1+U10			
Journey	06.08		DV60	H8	DV48	H8			DVF60	1+U10	DVF48	1+U10			
Nitro	6.07		DV48	H8	DV48	H8			DVF48	1+U10	DVF48	1+U10			DVR30
RAM	1.03		DV55	H8	DV55	H8			DVF55	1+U10	DVF55	1+U10			
Viper	7.97	1.03	DV40	H8	DV40	H8			DVF40	1+U10	DVF40	1+U10			
FERRARI															
599 GTB	6.06		DV65	H8	DV45	H8			DVF65	1+U10	DVF45	1+U10			
612 Scaglietti	4.04		DV60	H8	DV45	H8			DVF60	1+U10	DVF45	1+U10			
California	7.08		DV65	H8	DV40	H8			DVF65	1+U10	DVF40	1+U10			
F430	3.05		DV60	H8	DV53	H8			DVF60	1+U10	DVF53	1+U10			
FF	6.11		DV70	H8	DV40	H8			DVF70	1+U10	DVF40	1+U10			
Mondial 8	80		DV50	H8	DV50	H8			DVF50	1+U10	DVF50	1+U10			
FIAT															
124-127	68								DVF35	1+B6	DVF35	1+B6			
127	78								DVF35	1+B6	DVF35	1+B6			
127	81								DVF40	1+B6	DVF35	1+B6	DVF40	1+B6	
128	70								DVF35	1+B6	DVF35	1+B6			
131	74								DVF35	1+B6	DVF35	1+B6			
132	72								DVF35	1+B6	DVF35	1+B6			
500	10.07								DVF60	3	DVF35	3			
500 L	10.07								DVF65	3	DVF38	3			
850	68								DVF35	1+B6	DVF35	1+B6			
1300-2300									DVF35	1+B6	DVF35	1+B6			
2000 Sport	77								DVF35	1+B6	DVF35	1+B6			
Argenta	81								DVF40	1+B6	DVF40	1+B6			
Barchetta	5.95		DV48	H8	DV48	H8			DVF48	1+U10	DVF48	1+U10			
Brava	95		DV55	H8	DV48	H8			DVF55	1+U10	DVF48	1+U10			
Bravo	9.95	4.07	DV55	H8	DV48	H8			DVF58	1+U10	DVF48	1+U10			
Bravo	4.07								DVF60	3	DVF43	3			
Cinquecento	92	5.95	DV48	H8	DV48	H8			DVF48	1+U10	DVF48	1+U10			
Coupe	68								DVF35	1+B6	DVF35	1+B6			
Coupe	5.94		DV53	H8	DV48	H8	DV48	H8	DVF53	1+U10	DVF48	1+U10	DVF48	1+U10	
Croma	86	94	DV50	H8	DV50	H8	DV48	H8	DVF50	1+U10	DVF50	1+U10	DVF48	1+U10	
Croma	6.05								DVF60	2	DVF43	2			
Dobló Cargo	3.01	2.10	DV55	H8	DV45	H8			DVF55	1+U10	DVF45	1+U10			
Dobló Panorama	3.01	2.10	DV55	H8	DV45	H8			DVF55	1+U10	DVF45	1+U10			
Duna	1.87		DV45	H8	DV45	H8			DVF45	1+U10	DVF45	1+U10			
Fiorino	2.08								DVF65	5	DVF45	5			
Freemont	8.11		DV60	H8	DV48	H8			DVF60	1+U10	DVF48	1+U10			
Idea	1.04		DV55	H8	DV40	H8			DVF58	1+U10	DVF40	1+U10			
Linea	6.07								DVF65	4	DVF38	4			
Marea	1.97		DV55	H8	DV40	H8			DVF55	1+U10	DVF40	1+U10			
Multipla	1.99		DV60	H8	DV55	H8			DVF60	1+U10	DVF55	1+U10			
Palio Weekend	2.98		DV60	H8	DV45	H8			DVF60	1+U10	DVF45	1+U10			
Panda	9.03	2.12	DV55	H8	DV40	H8			DVF58	1+U10	DVF40	1+U10			
Panda	2.12								DVF50	3	DVF35	3			
Punto	94	11.99	DV55	H8	DV40	H8			DVF58	1+U10	DVF40	1+U10			
Punto	11.99	10.05	DV55	H8	DV45	H8			DVF55	1+U10	DVF45	1+U10			
Punto	10.05								DVF65	4	DVF38	4			
Regata	84		DV40	H8	DV40	H8			DVF40	1+U10	DVF40	1+U10			
Ritmo	78								DVF40	1+B6	DVF40	1+B6	DVF40	1+B6	
Sedici	6.06		DV65	H8	DV35	H8			DVF65	1+U10	DVF35	1+U10			
Seicento	4.98		DV48	H8	DV48	H8			DVF48	1+U10	DVF48	1+U10			
Spider	68								DVF35	1+B6	DVF35	1+B6			
Stilo	10.01	1.06	DV55	H8	DV48	H8			DVF55	1+U10	DVF45	1+U10			DVR35
Stilo	1.06								DVF55	4	DVF48	4			DVR35
Stilo Multiwagon	3.03		DV55	H8	DV48	H8			DVF55	1+U10	DVF48	1+U10			DVR35
Strada	81	6.99							DVF40	1+B6	DVF40	1+B6	DVF40	1+B6	
Strada	6.99		DV60	H8	DV45	H8			DVF60	1+U10	DVF45	1+U10			
Tipo	88	92	DV48	H8	DV48	H8	DV40	H8	DVF48	1+U10	DVF48	1+U10	DVF40	1+U10	
Ulysse	95	11.02	DV65	H8	DV50	H8	DV40	H8	DVF65	1+U10	DVF50	1+U10	DVF40	1+U10	
Ulysse	11.02														DVR35
Uno	83		DV48	H8			DV28	H8	DVF48	1+U10			DVF35	1+B6	
Ducato	1.82	3.94	DV50	H8	DV50	H8			DVF50	1+U10	DVF50	1+U10			
Ducato	3.94	7.06	DV55	H8	DV55	H8			DVF55	1+U10	DVF55	1+U10			

● = *montar con KIT 133 - mount with KIT 133 - monter avec le KIT 133 - mit KIT 133 montieren - montare con KIT 133 - montar com KIT 133*
■ = *montar con KIT 136 - mount with KIT 136 - monter avec le KIT 136 - mit KIT 136 montieren - montare con KIT 136 - montar com KIT 136*

Ducato	7.06								DVF65	3	DVF55	3			
Fiorino	1.88	5.01	DV45	H8					DVF45	1+U10					
Scudo	2.96	1.07	DV65	H8	DV50	H8			DVF65	1+U10	DVF50	1+U10			
Scudo	1.07		DV65	H8	DV50	H8			DVF65	1+U10	DVF50	1+U10			DVR35
FORD															
B-MAX	10.12								DVF75	2S2	DVF65	4			
Capri	74	80	DV28	H8	DV28	H8	DV45	H1							
C-MAX	12.10								DVF75	2S2	DVF60	4			
C-MAX	2.07	12.10							DVF65	2	DVF48	2			
Consul (D)	74		DV45	H1/H8	DV45	H1/H8			DVF45	1+U10	DVF45	1+U10			
Cortina	79	82	DV45	H1	DV45	H1									
Cougar	11.98		DV55	H8	DV50	H8	DV55	H8	DVF55	1+U10	DVF50	1+U10	DVF55	1+U10	
Escort	80		DV45	H1	DV45	H1	DV45	H1							
Escort (D)	79	80	DV45	H1	DV45	H1	DV40	H1							
Escort 2 (D)	75	80	DV45	H1	DV45	H1									
Escort 2 (GB)	75	80	DV45	H1	DV45	H1									
Escort Guia Nomade	90		DV45	H1	DV45	H1	DV40	H1							
Explorer	91	12.94	DV45	H1	DV45	H1									
Explorer	95		DV45	H8	DV45	H8			DVF45	1+U10	DVF45	1+U10			
Fiesta	76	89	DV28	H1	DV28	H1	DV40	H1							
Fiesta	89	96	DV45	H1	DV45	H1	DV40	H1							
Fiesta	96	11.01	DV48	H8	DV48	H8			DVF48	1+U10	DVF48	1+U10			
Fiesta (3/5dr)	11.01	10.08	DV55	H8	DV40	H8			DVF55	1+U10	DVF40	1+U10			
Fiesta (3/5dr)	10.08								DVF65	3	DVF38	3			
Focus	11.98	11.04	DV55	H8	DV48	H8	DV40	H8	DVF55	1+U10	DVF48	1+U10	DVF40	1+U10	
Focus	11.04	4.11							DVF65	2	DVF43	2			
Focus	4.11								DVF75	2S2	DVF70	3			
Focus (4dr)	4.05	4.11							DVF65	2	DVF43	2			
Focus (4dr)	4.11								DVF70	3	DVF70	3			
Focus CC	10.06								DVF65	2	DVF43	2			
Focus C-MAX	11.03	2.07							DVF65	2	DVF48	2			
Focus Sportbreak	5.11								DVF75	2S2	DVF70	3			
Focus Wagon	11.98	11.04	DV55	H8	DV48	H8			DVF55	1+U10	DVF48	1+U10			
Focus Wagon	11.04	5.11							DVF65	2	DVF43	2			
Fusion	11.02		DV55	H8	DV40	H8			DVF55	1+U10	DVF40	1+U10			
Galaxy	95	01	DV70	H12	DV70	H12	DV40	H8							
Galaxy	01	5.06							DVF70	2	DVF70	2			
Galaxy	5.06	11.08							DVF75	2S2	DVF65	3			
Galaxy	1.09	03.15							DVF75	2S2	DVF65	3			
Ghia	74	80	DV28	H8	DV28	H8	DV45	H1	DVF35	1+U10	DVF35	1+U10			
Granada	72		DV45	H1	DV45	H1	DV40	H1							
Grand C-MAX	12.10								DVF70	4	DVF60	4			
Ka	10.96	10.08	DV45	H1	DV45	H1									
Ka	10.08		DV60	H8	DV35	H8			DVF60	1+U10	DVF35	1+U10			
Kombi	72		DV45	H1	DV45	H1	DV40	H1							
Kuga	3.08	3.13							DVF60	3	DVF40	3			
Kuga	3.13								DVF70	3	DVF70	3			
Maverick	93	4.98	DV45	H1	DV45	H1									
Maverick	2.01		DV48	H8	DV48	H8			DVF48	1+U10	DVF48	1+U10			
Mondeo	3.93	11.00	DV50	H8	DV50	H8	DV45	H1	DVF50	1+U10	DVF50	1+U10			
Mondeo (4dr)	11.00	3.07	DV55	H8	DV50	H8			DVF55	1+U10	DVF50	1+U10			
Mondeo (5dr)	11.00	3.07	DV55	H8	DV50	H8			DVF55	1+U10	DVF50	1+U10			
Mondeo (4/5/Sportbreak)	3.07								DVF65	3	DVF48	3			
Mondeo Wagon	3.93	11.00	DV50	H8	DV50	H8	DV28	H1	DVF50	1+U10	DVF50	1+U10			
Mondeo Wagon	11.00	3.07	DV55	H8	DV50	H8			DVF55	1+U10	DVF50	1+U10			
Orion	83		DV45	H1	DV45	H1									
Probe	95		DV50	H8	DV50	H8	DV50	H8	DVF50	1+U10	DVF50	1+U10	DVF50	1+U10	
Puma	10.97		DV48	H8	DV48	H8	DV48	H8	DVF48	1+U10	DVF48	1+U10	DVF48	1+U10	
Ranger	6.99	4.11	DV45	H8	DV45	H8			DVF45	1+U10	DVF45	1+U10			
Ranger	4.11		DV60	H8	DV40	H8			DVF60	1+U10	DVF40	1+U10			
Scorpio	85		DV45	H1	DV45	H1	DV45	H1							
Sierra	82		DV45	H1	DV45	H1	DV45	H1							
S-Max	5.06	1.09							DVF75	2S2	DVF65	3			
S-Max	1.09	1.15							DVF75	2S2	DVF65	3			
Streetka	5.03		DV48	H8	DV48	H8			DVF48	1+U10	DVF48	1+U10			
Taunus	70	79	DV35	H1/H8	DV35	H1/H8									
Taunus	79		DV45	H1	DV45	H1									
Tourneo Connect	6.02	13	DV55	H8	DV50	H8	DV28	H8	DVF55	1+U10	DVF50	1+U10			
Tourneo Connect	13								DVF75	2S2	DVF75	2S2			

● = *montar con KIT 133 - mount with KIT 133 - monter avec le KIT 133 - mit KIT 133 montieren - montare con KIT 133 - montar com KIT 133*
■ = *montar con KIT 136 - mount with KIT 136 - monter avec le KIT 136 - mit KIT 136 montieren - montare con KIT 136 - montar com KIT 136*

			DURAVISION						DURAVISION FLEX						DURAVISION rear
Courier	99		DV45	H1	DV45	H1									
Tourneo Courier	13		DV70	H8	DV70	H8			DVF70	1+U10	DVF70	1+U10			
Tourneo Custom	5.11								DVF75	2S2	DVF75	2S2	DVF40	1+U10	
Transit	9.85	7.00	DV55	H8	DV55	H8			DVF55	1+U10	DVF55	1+U10			
Transit	7.00	5.06	DV70	H8	DV60	H8			DVF70	1+U10	DVF60	1+U10			
Transit	5.06		DV70	H8	DV60	H8			DVF70	1+U10	DVF60	1+U10			
Transit Box	5.14								DVF75	2S2	DVF50	3			
Transit Connect	9.13								DVF75	2S2	DVF70	4			
Transit Custom	11.12								DVF75	2S2	DVF70	4			
Transit Tourneo	11.94	12.00	DV55	H8	DV55	H8			DVF55	1+U10	DVF55	1+U10			
GALLOPER															
Exceed	5.98		DV40	H8	DV40	H8	DV28	H8	DVF40	1+U10	DVF40	1+U10			
Santamo	11.98		DV55	H8	DV45	H8	DV40	H8	DVF55	1+U10	DVF45	1+U10	DVF40	1+U10	
Super Exceed	8.98		DV48	H8	DV48	H8	DV35	H8	DVF48	1+U10	DVF48	1+U10	DVF38	1+U10	
HONDA															
Accord	91	10.98	DV55	H8	DV50	H8			DVF55	1+U10	DVF50	1+U10			
Accord	11.98	3.03	DV55	H8	DV48	H8			DVF55	1+U10	DVF48	1+U10			
Accord (4dr)	3.03	2.06	DV65	H8	DV35	H8			DVF65	1+U10	DVF38	1+U10			
Accord	2.06	7.08	DV65	H8	DV35	H8			DVF65	1+U10	DVF38	1+U10			
Accord	7.08		DV60	H8	DV55	H8			DVF60	1+U10	DVF55	1+U10			
Accord Coupe	93	2.98	DV55	H8	DV48	H8			DVF55	1+U10	DVF48	1+U10			
Accord Coupe	2.98		DV55	H8	DV45	H8			DVF55	1+U10	DVF45	1+U10			
Accord Tourer	3.03	2.06	DV65	H8	DV35	H8			DVF65	1+U10	DVF38	1+U10			
Accord Tourer	2.06	7.08	DV65	H8	DV35	H8			DVF65	1+U10	DVF38	1+U10			
Accord Tourer	7.08		DV60	H8	DV55	H8			DVF60	1+U10	DVF55	1+U10			
Civic	72	86							DVF35	1+B6	DVF35	1+B6			
Civic	2.12		DV65	H8	DV45	H8	DV48	H8	DVF65	1+U10	DVF45	1+U10	DVF48	1+U10	
Civic (5dr)	1.95	9.01	DV50	H8	DV45	H8	DV45	H8	DVF50	1+U10	DVF45	1+U10	DVF45	1+U10	
Civic (3dr)	1.95	9.01	DV50	H8	DV45	H8	DV40	H8	DVF50	1+U10	DVF45	1+U10	DVF40	1+U10	
Civic (3/5dr)	9.01	1.06	DV60	H8	DV35	H8			DVF60	1+U10	DVF38	1+U10			
Civic (4dr)	9.01	1.06	DV53	H8	DV48	H8			DVF53	1+U10	DVF48	1+U10			
Civic	86	88	DV40	H8	DV40	H8			DVF40	1+U10	DVF40	1+U10			
Civic	89	92	DV48	H8	DV48	H8	DV45	H8	DVF48	1+U10	DVF48	1+U10	DVF45	1+U10	
Civic	93	12.94	DV50	H8	DV45	H8	DV45	H8	DVF50	1+U10	DVF45	1+U10	DVF45	1+U10	
Civic	1.06	2.12	DV65	H8	DV55	H8			DVF65	1+U10	DVF58	1+U10			
Civic Coupe	9.01		DV53	H8	DV48	H8			DVF53	1+U10	DVF48	1+U10			
Civic IMA	1.04	1.06	DV53	H8	DV48	H8			DVF53	1+U10	DVF48	1+U10			
Concerto	91	96	DV45	H8	DV45	H8	DV45	H8	DVF45	1+U10	DVF45	1+U10	DVF45	1+U10	
CR-V (I)	11.97	4.02	DV48	H8	DV48	H8	DV28	H8	DVF48	1+U10	DVF48	1+U10			
CR-V (II)	4.02	11.06	DV53	H8	DV50	H8	DV28	H8	DVF53	1+U10	DVF50	1+U10			
CR-V (III)	1.07	10.12	DV65	H8	DV40	H8			DVF65	1+U10	DVF40	1+U10			
CR-V (IV)	10.12		DV65	H8	DV40	H8	DV28	H8	DVF65	1+U10	DVF40	1+U10			
CRX	92		DV50	H8	DV48	H8	DV45	H8	DVF50	1+U10	DVF48	1+U10	DVF45	1+U10	
CR-Z	6.10		DV60	H8	DV50	H8			DVF60	1+U10	DVF50	1+U10			
FCX	7.08		DV70	H8	DV70	H8			DVF70	1+U10	DVF70	1+U10			
FR-V	11.04		DV65	H8	DV48	H8			DVF65	1+U10	DVF48	1+U10			
HRV	3.99		DV50	H8	DV40	H8			DVF50	1+U10	DVF43	1+U10			
Insight	4.09		DV65	H8	DV40	H8			DVF65	1+U10	DVF43	1+U10			
Jazz	4.02	7.08	DV50	H8	DV35	H8			DVF50	1+U10	DVF38	1+U10			
Jazz	7.08		DV65	H8	DV35	H8			DVF65	1+U10	DVF35	1+U10			
Legend	93		DV50	H8	DV48	H8			DVF50	1+U10	DVF48	1+U10			
Logo	3.99		DV50	H8	DV40	H8			DVF50	1+U10	DVF40	1+U10			
NSX	95		DV50	H8	DV50	H8			DVF50	1+U10	DVF50	1+U10			
Prelude	89	92	DV45	H8	DV45	H8			DVF45	1+U10	DVF45	1+U10			
Prelude	93	12.96	DV50	H8	DV48	H8	DV48	H8	DVF50	1+U10	DVF48	1+U10	DVF48	1+U10	
Prelude	1.97		DV50	H8	DV45	H8	DV48	H8	DVF50	1+U10	DVF45	1+U10	DVF48	1+U10	
Quintet	81		DV40	H8	DV40	H8			DVF40	1+U10	DVF40	1+U10			
S2000	10.99		DV40	H8	DV50	H8			DVF40	1+U10	DVF50	1+U10			
Stream	6.01		DV60	H8	DV35	H8			DVF60	1+U10	DVF35	1+U10			
HYUNDAI															
Accent	1.95	3.03	DV50	H8	DV45	H8	DV48	H8	DVF50	1+U10	DVF45	1+U10	DVF48	1+U10	
Accent	3.03	7.06	DV50	H8	DV45	H8	DV45	H8	DVF50	1+U10	DVF45	1+U10	DVF45	1+U10	
Accent	7.06		DV55	H8	DV40	H8			DVF55	1+U10	DVF40	1+U10			
Atos	2.98		DV50	H8	DV40	H8	DV35	H8	DVF50	1+U10	DVF40	1+U10	DVF35	1+U10	
Coupe	96	2.02	DV55	H8	DV45	H8	DV55	H8	DVF55	1+U10	DVF45	1+U10	DVF55	1+U10	
Coupe	2.02		DV55	H8	DV45	H8	DV50	H8	DVF55	1+U10	DVF45	1+U10	DVF50	1+U10	
Elantra	6.00		DV50	H8	DV45	H8	DV50	H8	DVF50	1+U10	DVF45	1+U10	DVF50	1+U10	
Genesis	1.08		DV60	H8	DV50	H8			DVF60	1+U10	DVF50	1+U10			
Getz	11.02		DV55	H8	DV35	H8	DV35	H8	DVF55	1+U10	DVF35	1+U10	DVF35	1+U10	
H-1	10.97		DV65	H8	DV50	H8	DV40	H8	DVF65	1+U10	DVF50	1+U10	DVF40	1+U10	

● = *montar con KIT 133 - mount with KIT 133 - monter avec le KIT 133 - mit KIT 133 montieren - montare con KIT 133 - montar com KIT 133*
■ = *montar con KIT 136 - mount with KIT 136 - monter avec le KIT 136 - mit KIT 136 montieren - montare con KIT 136 - montar com KIT 136*

			DURAVISION						DURAVISION FLEX						DURAVISION rear
i10	1.08		DV55	H8	DV40	H8			DVF55	1+U10	DVF40	1+U10			
i20	9.08		DV60	H8	DV40	H8			DVF60	1+U10	DVF40	1+U10			
i30	10.07	11.11							DVF60	3	DVF45	3			
i30	11.11		DV65	H8	DV35	H8			DVF65	1+U10	DVF35	1+U10			
i30 CW	10.07	6.12							DVF60	3	DVF45	3			
i30 CW	6.12		DV65	H8	DV35	H8			DVF65	1+U10	DVF35	1+U10			
i40	3.12		DV65	H8	DV35	H8			DVF65	1+U10	DVF35	1+U10			
i40 CW	7.11		DV65	H8	DV35	H8			DVF65	1+U10	DVF35	1+U10			
ix20	11.10								DVF65	3	DVF35	3			
ix35	1.10		DV60	H8	DV40	H8			DVF60	1+U10	DVF43	1+U10			
ix55	9.08								DVF60	3	DVF50	3			
Lantra	92		DV50	H8	DV45	H8			DVF50	1+U10	DVF45	1+U10			
Lantra SW	9.98		DV50	H8	DV45	H8	DV35	H8	DVF50	1+U10	DVF45	1+U10	DVF35	1+U10	
Matrix	6.01		DV55	H8	DV40	H8	DV35	H8	DVF55	1+U10	DVF40	1+U10	DVF35	1+U10	
Pony	90		DV45	H8	DV45	H8			DVF45	1+U10	DVF45	1+U10			
Pony	77	90							DVF40	1+B6	DVF40	1+B6			
S Coupe	92	96	DV45	H8	DV45	H8			DVF45	1+U10	DVF45	1+U10			
Santa Fe	2.01	3.06	DV55	H8	DV50	H8	DV28	H8	DVF55	1+U10	DVF50	1+U10			
Santa Fe	3.06	9.12	DV60	H8	DV45	H8			DVF60	1+U10	DVF45	1+U10			
Santa Fe	9.12		DV65	H8	DV35	H8			DVF65	1+U10	DVF35	1+U10			
Sonata	92	10.98	DV50	H8	DV45	H8			DVF50	1+U10	DVF45	1+U10			
Sonata	11.98	4.05	DV55	H8	DV50	H8			DVF55	1+U10	DVF50	1+U10			
Sonata	4.05	1.10	DV60	H8	DV50	H8			DVF60	1+U10	DVF50	1+U10			
Sonata	1.10		DV65	H8	DV45	H8			DVF65	1+U10	DVF45	1+U10			
Terracan	2.02		DV55	H8	DV50	H8	DV40	H8	DVF55	1+U10	DVF50	1+U10	DVF40	1+U10	
Trajet	3.00		DV65	H8	DV55	H8	DV40	H8	DVF65	1+U10	DVF55	1+U10	DVF40	1+U10	
Tucson	11.04		DV60	H8	DV40	H8			DVF60	1+U10	DVF40	1+U10			
Veloster	3.11		DV65	H8	DV45	H8			DVF65	1+U10	DVF45	1+U10			
XG	2.99		DV55	H8	DV50	H8			DVF55	1+U10	DVF50	1+U10			
INFINITI															
EX	10.08		DV55	H8	DV45	H8			DVF58	1+U10	DVF45	1+U10			
FX	10.08		DV55	H8	DV48	H8			DVF58	1+U10	DVF48	1+U10			
G37 Cabrio	9.10		DV65	H8	DV40	H8			DVF65	1+U10	DVF43	1+U10			
G37 Coupe	10.08		DV65	H8	DV40	H8			DVF65	1+U10	DVF43	1+U10			
G37 Sedán	10.08		DV65	H8	DV40	H8			DVF65	1+U10	DVF43	1+U10			
M	3.10		DV65	H8	DV48	H8			DVF65	1+U10	DVF48	1+U10			
INNOCENTI															
990	86		DV45	H8	DV45	H8			DVF45	1+U10	DVF45	1+U10	DVF35	1+B6	
A 40 S	89								DVF35	1+B6	DVF35	1+B6	DVF35	1+B6	
Mini De Tomaso Turbo	89								DVF35	1+B6	DVF35	1+B6	DVF35	1+B6	
Minidiesel	86												DVF35	1+B6	
ISUZU															
D-MAX (Rodeo)	5.02		DV55	H8	DV48	H8			DVF55	1+U10	DVF48	1+U10			
Trooper	4.00		DV50	H8	DV50	H8	DV35	H8	DVF50	1+U10	DVF50	1+U10	DVF38	1+U10	
Trooper	10.87	12.91	DV45	H8	DV45	H8	DV40	H8	DVF45	1+U10	DVF45	1+U10	DVF40	1+U10	
JAGUAR															
S-Type	6.01		DV60	H8	DV48	H8			DVF60	1+U10	DVF48	1+U10			
XF	3.08								DVF58	4	DVF48	4			
XF Sportbrake	9.12								DVF58	4	DVF48	4			
XJ	75	79							DVF35	1+B6	DVF35	1+B6			
XJ	79	95	DV45	H1	DV45	H1									
XJ	95	3.03	DV53	H8	DV53	H8			DVF53	1+U10	DVF53	1+U10			
XJ	1.10								DVF58	4	DVF48	4			
XJ-S Convertible	86		DV28	H1	DV28	H1									
XK Convertible	3.96	2.06	DV53	H8	DV53	H8			DVF53	1+U10	DVF53	1+U10			
XK Convertible	3.06		DV55	H8	DV53	H8			DVF55	1+U10	DVF53	1+U10			
XK Coupe	3.06		DV55	H8	DV53	H8			DVF55	1+U10	DVF53	1+U10			
X-Type	6.01		DV55	H8	DV48	H8			DVF55	1+U10	DVF48	1+U10			
JEEP															
Cherokee	91	3.97	DV50	H8	DV50	H8			DVF50	1+U10	DVF50	1+U10			
Cherokee	4.97	4.00	DV45	H8	DV45	H8	DV28	H8	DVF45	1+U10	DVF45	1+U10	DVF35	1+U10	
Cherokee	4.00		DV48	H8	DV48	H8			DVF48	1+U10	DVF48	1+U10			
Commander	9.05		DV45	H8	DV45	H8			DVF45	1+U10	DVF45	1+U10			
Compass	9.06		DV55	H8	DV50	H8			DVF55	1+U10	DVF50	1+U10			
Grand Cherokee	93	3.97	DV50	H8	DV50	H8			DVF50	1+U10	DVF50	1+U10			
Grand Cherokee	4.97	11.10	DV53	H8	DV53	H8			DVF53	1+U10	DVF53	1+U10			
Grand Cherokee	11.10		DV55	H8	DV53	H8			DVF55	1+U10	DVF53	1+U10			
Patriot	2.07		DV53	H8	DV53	H8			DVF53	1+U10	DVF53	1+U10			
Wrangler	11.96	4.07	DV28	H8	DV28	H8	DV45	H8	DVF35	1+U10	DVF35	1+U10	DVF45	1+U10	

● = *montar con KIT 133 - mount with KIT 133 - monter avec le KIT 133 - mit KIT 133 montieren - montare con KIT 133 - montar com KIT 133*
■ = *montar con KIT 136 - mount with KIT 136 - monter avec le KIT 136 - mit KIT 136 montieren - montare con KIT 136 - montar com KIT 136*

			DURAVISION						DURAVISION FLEX						DURAVISION rear
Wrangler	4.07		DV35	H8	DV35	H8			DVF38	1+U10	DVF38	1+U10			
Wrangler Limited	4.07		DV35	H8	DV35	H8			DVF38	1+U10	DVF38	1+U10			
KIA															
Carens	8.99	7.02	DV60	H8	DV48	H8	DV28	H8	DVF60	1+U10	DVF48	1+U10			
Carens	7.02	9.06	DV60	H8	DV45	H8	DV35	H8	DVF60	1+U10	DVF45	1+U10	DVF35	1+U10	
Carens	9.06	4.13	DV65	H8	DV40	H8			DVF65	1+U10	DVF40	1+U10			
Carens	4.13		DV70	H8	DV70	H8			DVF70	1+U10	DVF70	1+U10			
Carnival	3.99	6.06	DV60	H8	DV60	H8	DV45	H8	DVF60	1+U10	DVF60	1+U10	DVF45	1+U10	
Carnival	6.06		DV65	H8	DV45	H8			DVF65	1+U10	DVF45	1+U10			
Cee'd	12.06								DVF60	3	DVF45	3			
Cee'd SW	9.07								DVF60	3	DVF45	3			
Cerato	6.04		DV60	H8	DV40	H8			DVF60	1+U10	DVF40	1+U10			
Clarus	10.96		DV53	H8	DV48	H8			DVF53	1+U10	DVF48	1+U10			
Magentis	5.01	4.06	DV53	H8	DV50	H8			DVF53	1+U10	DVF50	1+U10			
Magentis	4.06		DV60	H8	DV45	H8			DVF60	1+U10	DVF45	1+U10			
Opirus	10.03		DV60	H8	DV45	H8			DVF60	1+U10	DVF45	1+U10			
Optima	3.12		DV60	H8	DV40	H8			DVF60	1+U10	DVF40	1+U10			
Picanto	4.04		DV55	H8	DV40	H8			DVF55	1+U10	DVF40	1+U10			
Pride	10.96		DV45	H8	DV45	H8	DV35	H8	DVF45	1+U10	DVF45	1+U10	DVF38	1+U10	
Pro Cee'd	2.08								DVF60	3	DVF45	3			
Rio	9.00	3.05	DV53	H8	DV45	H8			DVF53	1+U10	DVF45	1+U10			
Rio	3.05	9.11	DV55	H8	DV40	H8			DVF55	1+U10	DVF40	1+U10			
Rio	9.11		DV65	H8	DV40	H8			DVF65	1+U10	DVF40	1+U10			
Rio (5dr)	7.05		DV55	H8	DV40	H8			DVF55	1+U10	DVF40	1+U10			
Sephia I	95	97	DV53	H8	DV48	H8			DVF53	1+U10	DVF48	1+U10			
Sephia II	97		DV53	H8	DV48	H8			DVF53	1+U10	DVF48	1+U10			
Shuma	98		DV53	H8	DV48	H8	DV45	H8	DVF53	1+U10	DVF48	1+U10	DVF45	1+U10	
Sorento	7.02	11.09	DV60	H8	DV45	H8	DV35	H8	DVF60	1+U10	DVF45	1+U10	DVF35	1+U10	
Sorento	11.09		DV60	H8	DV50	H8			DVF60	1+U10	DVF50	1+U10			
Soul	2.09		DV60	H8	DV50	H8			DVF60	1+U10	DVF50	1+U10			
Sportage	95	9.04	DV50	H8	DV50	H8	DV40	H8	DVF50	1+U10	DVF50	1+U10	DVF40	1+U10	
Sportage	9.04	7.10	DV60	H8	DV40	H8			DVF60	1+U10	DVF40	1+U10			
Sportage	7.10		DV60	H8	DV45	H8			DVF60	1+U10	DVF45	1+U10			
Venga	2.10								DVF65	3	DVF35	3			
Pregio	10.96		DV53	H8	DV45	H8	DV45	H8	DVF53	1+U10	DVF45	1+U10	DVF45	1+U10	
LADA															
1200-1600	72								DVF35	1+B6	DVF35	1+B6			
Kalina (1118)	10.04		DV60	H8	DV40	H8			DVF60	1+U10	DVF40	1+U10			
Kalina (1119)	10.04		DV60	H8	DV40	H8			DVF60	1+U10	DVF40	1+U10			
Niva	78								DVF35	1+B6	DVF35	1+B6			
Priora (2170)	10.04		DV50	H8	DV50	H8	DV50	H8	DVF50	1+U10	DVF50	1+U10	DVF50	1+U10	
Priora (2172)	10.04		DV50	H8	DV50	H8	DV50	H8	DVF50	1+U10	DVF50	1+U10	DVF50	1+U10	
LANCIA															
A 112	78								DVF35	1+B6	DVF35	1+B6			
Dedra	90		DV50	H8	DV48	H8			DVF50	1+U10	DVF48	1+U10			
Delta	85	92	DV45	H8	DV45	H8	DV45	H8	DVF45	1+U10	DVF45	1+U10	DVF45	1+U10	
Delta	93	9.08	DV53	H8	DV48	H8	DV53	H8	DVF53	1+U10	DVF48	1+U10	DVF53	1+U10	
Delta	9.08								DVF60	3	DVF43	3			
Flavia	3.12		DV60	H8	DV55	H8			DVF60	1+U10	DVF55	1+U10			
Gamma	85		DV45	H8	DV45	H8			DVF45	1+U10	DVF45	1+U10			
K	95		DV60	H8	DV50	H8			DVF60	1+U10	DVF50	1+U10			
Lybra	7.99		DV55	H8	DV53	H8			DVF55	1+U10	DVF53	1+U10			
Lybra SW	7.99		DV55	H8	DV53	H8			DVF55	1+U10	DVF53	1+U10			
Musa	10.04		DV55	H8	DV40	H8			DVF58	1+U10	DVF40	1+U10			
Phedra	11.02		DV65	U8■	DV65	U8■									DVR35
Prisma	85		DV45	H8	DV45	H8			DVF45	1+U10	DVF45	1+U10			
Thema	85	94	DV50	H8	DV50	H8			DVF50	1+U10	DVF50	1+U10			
Thema	9.11		DV60	H8	DV50	H8			DVF60	1+U10	DVF50	1+U10			
Thesis	1.02		DV65	H8	DV53	H8			DVF65	1+U10	DVF53	1+U10			
Y 10	85	92	DV45	H8					DVF45	1+U10	DVF35	1+B6			
Ypsilon	2.96	10.02	DV55	H8	DV40	H8			DVF58	1+U10	DVF40	1+U10			
Ypsilon	10.02	5.11	DV60	H8	DV40	H8			DVF60	1+U10	DVF40	1+U10			
Ypsilon	5.11								DVF60	3	DVF38	3			
Z	4.95		DV65	H8	DV50	H8	DV40	H8	DVF65	1+U10	DVF50	1+U10	DVF40	1+U10	
Voyager	9.11		DV60	H8	DV50	H8			DVF60	1+U10	DVF50	1+U10			DVR40

● = *montar con KIT 133 - mount with KIT 133 - monter avec le KIT 133 - mit KIT 133 montieren - montare con KIT 133 - montar com KIT 133*
■ = *montar con KIT 136 - mount with KIT 136 - monter avec le KIT 136 - mit KIT 136 montieren - montare con KIT 136 - montar com KIT 136*

LAND ROVER															
88	6.82	9.83							DVF35	1+B6	DVF35	1+B6			
109	6.82	9.83							DVF35	1+B6	DVF35	1+B6			
Defender	90		DV28	H1	DV28	H1	DV28	H1							
Discovery	90	12.97	DV45	H8	DV45	H8	DV35	H8	DVF45	1+U10	DVF45	1+U10	DVF35	1+U10	
Discovery	10.04		DV55	H8	DV55	H8	DV40	H8	DVF55	1+U10	DVF55	1+U10	DVF40	1+U10	
Freelander	1.98	2.06	DV55	H8	DV53	H8			DVF55	1+U10	DVF53	1+U10			
Freelander 2	2.06								DVF60	4	DVF50	4			
Range Rover	90	94	DV45	H1	DV45	H1	DV45	H1							
Range Rover	95	3.02	DV55	H8	DV55	H8	DV48	H8	DVF55	1+U10	DVF55	1+U10	DVF48	1+U10	
Range Rover Evoque (3dr)	6.11								DVF58	3	DVF50	3			
Range Rover Evoque (5dr)	6.11								DVF58	3	DVF50	3			
Range Rover Sport	6.05	8.13	DV55	H8	DV55	H8	DV40	H8	DVF55	1+U10	DVF55	1+U10	DVF40	1+U10	
LEXUS															
CT	12.10		DV65	H8	DV45	H8			DVF65	1+U10	DVF45	1+U10			
GS	8.97	4.05	DV60	H8	DV50	H8			DVF60	1+U10	DVF50	1+U10			
GS	4.05	1.12	DV60	H8	DV45	H8			DVF60	1+U10	DVF45	1+U10			
GS	1.12		DV65	H8	DV45	H8			DVF65	1+U10	DVF45	1+U10			
IS	4.99	12.05	DV55	H8	DV48	H8			DVF55	1+U10	DVF48	1+U10			
IS	12.05	6.13	DV55	H8	DV50	H8			DVF55	1+U10	DVF50	1+U10			
IS	6.13		DV60	H8	DV45	H8			DVF60	1+U10	DVF45	1+U10			
IS Sport Cross	10.01		DV55	H8	DV48	H8			DVF55	1+U10	DVF48	1+U10			
LS	4.06		DV60	H8	DV40	H8			DVF60	1+U10	DVF43	1+U10			
RX	6.03		DV65	H8	DV55	H8			DVF65	1+U10	DVF55	1+U10			
SC	8.01		DV60	H8	DV50	H8			DVF60	1+U10	DVF50	1+U10			
LIGIER															
JS 16	94		DV60	H8					DVF60	1+U10					
LOTUS															
Evora	5.09								DVF65	2					
Exige	9.01		DV65	H8					DVF65	1+U10					
MASERATI															
228	89		DV50	H8	DV50	H8			DVF50	1+U10	DVF50	1+U10			
420-430	89		DV50	H8	DV50	H8			DVF50	1+U10	DVF50	1+U10			
Ghibli	93		DV50	H8	DV50	H8			DVF50	1+U10	DVF50	1+U10			
Gran Cabrio	6.10		DV65	H8	DV40	H8			DVF65	1+U10	DVF43	1+U10			
Gran Turismo	8.08		DV65	H8	DV40	H8			DVF65	1+U10	DVF43	1+U10			
Plus	89		DV50	H8	DV50	H8			DVF50	1+U10	DVF50	1+U10			
Quattroporte	95	3.04	DV53	H8	DV50	H8			DVF53	1+U10	DVF50	1+U10			
Quattroporte	3.04		DV65	H8	DV40	H8			DVF65	1+U10	DVF43	1+U10			
Shamal	93		DV50	H8	DV50	H8			DVF50	1+U10	DVF50	1+U10			
Spider	93		DV50	H8	DV50	H8			DVF50	1+U10	DVF50	1+U10			
MAZDA															
2	4.03	9.07	DV60	H8	DV40	H8			DVF60	1+U10	DVF40	1+U10			
2	10.07		DV60	H8	DV35	H8			DVF60	1+U10	DVF35	1+U10			
3	11.03	6.09							DVF53	2	DVF48	2			
3	6.09		DV60	H8	DV48	H8			DVF60	1+U10	DVF48	1+U10			
5	2.05		DV65	H8	DV40	H8			DVF65	1+U10	DVF40	1+U10			
6 (4dr)	6.02	8.07	DV55	H8	DV45	H8			DVF55	1+U10	DVF45	1+U10			
6 (5dr)	6.02	8.07	DV55	H8	DV45	H8	DV50	H8	DVF55	1+U10	DVF45	1+U10	DVF50	1+U10	
6 (4dr)	8.07	1.13	DV60	H8	DV40	H8			DVF60	1+U10	DVF40	1+U10			
6 (5dr)	8.07	1.13	DV60	H8	DV40	H8	DV50	H8	DVF60	1+U10	DVF40	1+U10	DVF50	1+U10	
6	1.13		DV60	H8	DV45	H8			DVF60	1+U10	DVF45	1+U10			
6 Wagon	11.02	8.07	DV55	H8	DV45	H8			DVF55	1+U10	DVF45	1+U10			
6 SW	8.07	1.13	DV60	H8	DV40	H8			DVF60	1+U10	DVF40	1+U10			
6 Wagon	1.13		DV60	H8	DV45	H8			DVF60	1+U10	DVF45	1+U10			
110 S Coupe									DVF40	1+B6	DVF40	1+B6			
323	77	80							DVF35	1+B6	DVF35	1+B6			
323	86	92	DV45	H8	DV45	H8	DV45	H8	DVF45	1+U10	DVF45	1+U10	DVF45	1+U10	
323	93	98	DV53	H8	DV45	H8	DV40	H8	DVF53	1+U10	DVF45	1+U10	DVF40	1+U10	
323 F (5dr/Sedan)	98		DV53	H8	DV48	H8	DV28	H8	DVF53	1+U10	DVF48	1+U10			
616	77	80							DVF35	1+B6	DVF35	1+B6			
626	86	91	DV45	H8	DV45	H8	DV45	H8	DVF45	1+U10	DVF45	1+U10	DVF45	1+U10	
626	4.92	97	DV53	H8	DV50	H8			DVF53	1+U10	DVF50	1+U10			
626 (Hatchback/Sedan)	5.97		DV53	H8	DV48	H8	DV50	H8	DVF53	1+U10	DVF48	1+U10	DVF50	1+U10	
626 SW	2.98		DV53	H8	DV48	H8	DV28	H8	DVF53	1+U10	DVF48	1+U10	DVF35	1+U10	
808	77	80							DVF35	1+B6	DVF35	1+B6			
818	77	80							DVF35	1+B6	DVF35	1+B6			
929	86		DV45	H8	DV45	H8			DVF45	1+U10	DVF45	1+U10			

● = *montar con KIT 133 - mount with KIT 133 - monter avec le KIT 133 - mit KIT 133 montieren - montare con KIT 133 - montar com KIT 133*
■ = *montar con KIT 136 - mount with KIT 136 - monter avec le KIT 136 - mit KIT 136 montieren - montare con KIT 136 - montar com KIT 136*

			DURAVISION						DURAVISION FLEX						DURAVISION rear
1500									DVF40	1+B6	DVF40	1+B6			
1800									DVF40	1+B6	DVF40	1+B6			
B-2500	6.99		DV45	H8	DV45	H8			DVF45	1+U10	DVF45	1+U10			
CX-5	11.11		DV65	H8	DV45	H8			DVF65	1+U10	DVF45	1+U10			
CX-7	10.07		DV65	H8	DV40	H8			DVF65	1+U10	DVF40	1+U10			
Demio	8.98		DV50	H8	DV40	H8			DVF50	1+U10	DVF40	1+U10			
MPV	6.97	9.99	DV55	H8	DV50	H8	DV40	H8	DVF55	1+U10	DVF50	1+U10	DVF40	1+U10	
MPV	9.99		DV60	H8	DV60	H8	DV40	H8	DVF60	1+U10	DVF60	1+U10	DVF40	1+U10	
MX-3	93		DV53	H8	DV45	H8	DV53	H8	DVF53	1+U10	DVF45	1+U10	DVF53	1+U10	
MX-5	93	3.05	DV45	H8	DV45	H8			DVF45	1+U10	DVF45	1+U10			
MX-5	3.05		DV45	H8	DV45	H8			DVF45	1+U10	DVF45	1+U10			
MX-6	93		DV50	H8	DV50	H8			DVF50	1+U10	DVF50	1+U10			
Premacy	7.99		DV60	H8	DV40	H8	DV35	H8	DVF60	1+U10	DVF40	1+U10	DVF35	1+U10	
RX 2	77	80							DVF35	1+B6	DVF35	1+B6			
RX 3	77	80							DVF35	1+B6	DVF35	1+B6			
RX 4	77	80							DVF35	1+B6	DVF35	1+B6			
RX 7 Cabrio	93		DV50	H8	DV50	H8	DV50	H8	DVF50	1+U10	DVF50	1+U10	DVF50	1+U10	
RX 7 Coupe	89		DV55	H8	DV55	H8	DV55	H8	DVF55	1+U10	DVF55	1+U10	DVF55	1+U10	
RX-8	7.03		DV50	H8	DV45	H8			DVF50	1+U10	DVF45	1+U10			
Tribute	3.00		DV48	H8	DV48	H8	DV28	H8	DVF48	1+U10	DVF48	1+U10			
Xedos	93		DV53	H8	DV50	H8			DVF53	1+U10	DVF50	1+U10			
Xedos 9	7.93		DV50	H8	DV50	H8			DVF50	1+U10	DVF50	1+U10			
MERCEDES BENZ															
190 (W201)	84	93	DV60	H8					DVF60	1+U10					
200, 300 (W123)	76	85	DV50	H8	DV50	H8			DVF50	1+U10	DVF50	1+U10			
200, 300 CE (C123)	77	85	DV50	H8	DV50	H8			DVF50	1+U10	DVF50	1+U10			
A Class (W168)	7.97	10.04	DV65	H8	DV60	H8	DV35	H8	DVF65	1+U10	DVF60	1+U10	DVF35	1+U10	
A Class (W169)	10.04	6.12							DVF65	4	DVF58	4			
A Class (W176)	6.12								DVF60	4	DVF48	4			
B Class (W245)	5.05	10.11							DVF65	4	DVF58	4			
B Class (W246)	11.11								DVF65	4	DVF48	4			
C Class (W202)	3.93	5.00	DV60	H8					DVF60	1+U10					
C Class (W203)	5.00	4.04	DV60	H8	DV50	H8			DVF60	1+U10	DVF50	1+U10			
C Class (W204)	1.07								DVF60	2	DVF60	2			
C Class T Model (T204)	03	07							DVF55	7	DVF55	7			
C Class SW (S203)	3.01	4.04	DV60	H8	DV55	H8			DVF60	1+U10	DVF55	1+U10			
C Class SW (S204)	8.07								DVF60	2	DVF60	2			
C Class Coupe (C204)	1.07								DVF60	2	DVF60	2			
C Class SportCoupe (CL203)	3.01	4.04	DV60	H8	DV50	H8			DVF60	1+U10	DVF50	1+U10			
CL Class (C215)	3.99	3.06							DVF65	2	DVF65	2			
CL Class (CL216)	5.06								DVF65	2	DVF65	2			
CLA Class (C117)	2.13								DVF60	4	DVF48	4			
CLC Class (C203)	08	10							DVF55	7	DVF55	7			
CLK Class (C208)	97	5.02	DV60	H8					DVF60	1+U10					
CLK Class (C209)	5.02								DVF55	7	DVF55	7			
CLS Class (C219)	10.04	12.10							DVF65	2	DVF65	2			
CLS Class (C218)	1.11								DVF60	2	DVF60	2			
CLS Class S.Brake(X218)	10.12								DVF60	2	DVF60	2			
E Class (W124)	93	97	DV60	H8					DVF60	1+U10					
E Class (W210)	95	3.02	DV60	H8					DVF60	1+U10					
E Class (W211)	3.02	12.08							DVF65	2	DVF65	2			
E Class (W212)	1.09								DVF60	2	DVF60	2			
E Class Cabrio (A207)	1.09								DVF60	2	DVF60	2			
E Class Coupe (C207)	1.09								DVF60	2	DVF60	2			
E Class SW (S211)	3.03	12.08							DVF65	2	DVF65	2			
E Class SW (S212)	1.09								DVF60	2	DVF60	2			
G Class (W460)	80	8.93	DV40	H8	DV40	H8	DV40	H8	DVF40	1+U10	DVF40	1+U10	DVF40	1+U10	
G Class (W463)	8.93		DV40	H8	DV40	H8	DV35	H8	DVF40	1+U10	DVF40	1+U10	DVF38	1+U10	
GL Class (X164)	9.06	8.12							DVF70	4	DVF53	4			
GLK Class (X204)	6.08								DVF55	2	DVF45	2			
M Class (W163)	3.98	6.05	DV55	H8	DV55	H8	DV40	H8	DVF55	1+U10	DVF55	1+U10	DVF43	1+U10	
M Class (W164)	6.05	5.11							DVF70	4	DVF53	4			
R Class (W251)	2.06								DVF70	4	DVF53	4			
S Class (W126)	80	6.91	DV55	H8	DV55	H8			DVF55	1+U10	DVF55	1+U10			
S Class (W220)	10.98	9.01	DV70	H12	DV70	H12									
S Class (W220)	9.01	10.05							DVF70	2	DVF70	2			
S Class (W221)	10.05								DVF65	2	DVF65	2			
SL Class (R230)	10.01	1.12							DVF65	2	DVF65	2			
SLK Class (R170)	11.94	4.04	DV55	H8	DV55	H8			DVF55	1+U10	DVF55	1+U10			
SLK Class (R171)	4.04	1.11							DVF55	4	DVF55	4			

● = *montar con KIT 133 - mount with KIT 133 - monter avec le KIT 133 - mit KIT 133 montieren - montare con KIT 133 - montar com KIT 133*
■ = *montar con KIT 136 - mount with KIT 136 - monter avec le KIT 136 - mit KIT 136 montieren - montare con KIT 136 - montar com KIT 136*

			DURAVISION						DURAVISION FLEX						DURAVISION rear
SLK Class (R172)	2.11								DVF55	4	DVF55	4			
V Class	10.96		DV65	U8■	DV55	U8■	DV45	H8	DVF65	1+U8■	DVF55	1+U8■	DVF45	1+U10	
MB 100	87		DV55	H8	DV55	H8			DVF55	1+U10	DVF55	1+U10			
Vaneo	11.01	04	DV65	H8	DV60	H8	DV40	H8	DVF65	1+U10	DVF60	1+U10	DVF40	1+U10	
Vaneo	04								DVF65	4	DVF60	4			
Sprinter	95	5.06	DV60	H8	DV55	H8			DVF60	1+U10	DVF55	1+U10			
Sprinter	6.06								DVF65	4	DVF60	4			
Viano (W639)	9.03	2.05	DV65	U8	DV65	U8	DV35	H8	DVF65	1+U8■	DVF65	1+U8■	DVF35	1+U10	
Viano (W639)	3.05								DVF70	2	DVF65	2			
Vito	9.05								DVF70	4	DVF60	4			
MG															
TF	6.01		DV50	H8	DV50	H8			DVF50	1+U10	DVF50	1+U10			
ZR	6.01		DV45	H8	DV45	H8	DV45	H8	DVF45	1+U10	DVF45	1+U10	DVF45	1+U10	DVR40
ZS	6.01		DV50	H8	DV45	H8			DVF50	1+U10	DVF45	1+U10			
ZT	6.01		DV55	H8	DV55	H8			DVF55	1+U10	DVF55	1+U10			
MICROCARS															
Zeus			DV45	H8					DVF45	1+U10					
MINI															
Cabrio	7.04	11.07	DV45	H8	DV48	H8			DVF45	1+U10	DVF48	1+U10			
Cabrio	11.07								DVF45	5	DVF48	5			
Clubman	10.07	4.12	DV45	H8	DV48	H8			DVF45	1+U10	DVF48	1+U10			
Clubman	4.12								DVF45	5	DVF48	5			
Countryman	6.10								DVF45	4	DVF50	4			
Mini	9.01	9.06	DV45	H8	DV48	H8			DVF45	1+U10	DVF48	1+U10			
Mini	9.06								DVF45	5	DVF48	5			
Paceman	4.12								DVF45	4	DVF50	4			
Roadster	2.12								DVF50	4	DVF53	4			
MITSUBISHI															
3000 GT	93		DV53	H8	DV50	H8			DVF53	1+U10	DVF50	1+U10			
ASX	2.10		DV60	H8	DV53	H8			DVF60	1+U10	DVF53	1+U10			
Carisma	10.96		DV53	H8	DV50	H8	DV50	H8	DVF53	1+U10	DVF50	1+U10	DVF50	1+U10	
Colt	71	78							DVF35	1+B6	DVF35	1+B6			
Colt	95	4.04	DV50	H8	DV40	H8	DV35	H8	DVF50	1+U10	DVF43	1+U10	DVF35	1+U10	
Colt	4.04		DV65	H8	DV28	H8									
Colt CZC	4.06		DV65	H8	DV28	H8									
Eclipse	93		DV50	H8	DV50	H8			DVF50	1+U10	DVF50	1+U10			
Galant	71	77							DVF35	1+B6	DVF35	1+B6			
Galant	77	79							DVF40	1+B6	DVF40	1+B6			
Galant	90	92	DV48	H8	DV45	H8			DVF48	1+U10	DVF45	1+U10			
Galant	92	8.96	DV53	H8	DV45	H8	DV55	H8	DVF53	1+U10	DVF45	1+U10	DVF55	1+U10	
Galant	8.96		DV55	H8	DV45	H8			DVF55	1+U10	DVF45	1+U10			
Galant Wagon	93		DV55	H8	DV45	H8	DV40	H8	DVF55	1+U10	DVF45	1+U10	DVF40	1+U10	
Grandis	1.08								DVF70	1+U10	DVF55	1+U10			
i-MIEV	11.10		DV70	H8					DVF70	1+U10					
L200	10.96	11.01	DV48	H8	DV48	H8			DVF48	1+U10	DVF48	1+U10			
L200	11.01	11.05	DV48	H8	DV45	H8			DVF48	1+U10	DVF45	1+U10			
L200	11.05	10.09	DV55	H8	DV48	H8			DVF55	1+U10	DVF48	1+U10			
L200	10.09		DV55	H8	DV45	H8			DVF55	1+U10	DVF45	1+U10			
Lancer	71	78							DVF35	1+B6	DVF35	1+B6			
Lancer	1.08		DV60	H8	DV40	H8			DVF60	1+U10	DVF43	1+U10			
Lancer EVO VII	2.01		DV60	H8	DV45	H8			DVF60	1+U10	DVF45	1+U10			
Lancer Sportback	6.08		DV60	H8	DV40	H8			DVF60	1+U10	DVF40	1+U10			
Montero / Pajero	86	90	DV40	H8	DV40	H8			DVF40	1+U10	DVF40	1+U10			
Montero / Pajero	91	8.97	DV48	H8	DV48	H8			DVF48	1+U10	DVF48	1+U10			
Montero / Pajero	9.97	4.00	DV48	H8	DV48	H8	DV40	H8	DVF48	1+U10	DVF48	1+U10	DVF40	1+U10	
Montero / Pajero	4.00	2.07	DV50	H8	DV50	H8	DV40	H8	DVF50	1+U10	DVF50	1+U10	DVF40	1+U10	
Montero / Pajero	2.07		DV55	H8	DV50	H8			DVF55	1+U10	DVF50	1+U10			
Montero IO	10.99		DV45	H8	DV48	H8	DV40	H8	DVF45	1+U10	DVF48	1+U10	DVF40	1+U10	
Montero Sport	11.98		DV50	H8	DV50	H8	DV40	H8	DVF50	1+U10	DVF50	1+U10	DVF40	1+U10	
Outlander	4.03	11.06	DV55	H8	DV45	H8			DVF55	1+U10	DVF45	1+U10			
Outlander	11.06	8.12	DV60	H8	DV53	H8			DVF60	1+U10	DVF53	1+U10			
Outlander	8.12		DV65	H8	DV45	H8			DVF65	1+U10	DVF45	1+U10			
Space Gear	5.95		DV53	H8	DV45	H8	DV28	H8	DVF53	1+U10	DVF45	1+U10	DVF35	1+U10	
Space Runner	95		DV55	H8	DV45	H8	DV40	H8	DVF55	1+U10	DVF45	1+U10	DVF40	1+U10	
Space Star	6.98	12.04	DV53	H8	DV45	H8	DV28	H8	DVF53	1+U10	DVF45	1+U10	DVF35	1+U10	
Space Star	1.13		DV55	H8	DV35	H8			DVF55	1+U10	DVF35	1+U10			
NISSAN															

● = *montar con KIT 133 - mount with KIT 133 - monter avec le KIT 133 - mit KIT 133 montieren - montare con KIT 133 - montar com KIT 133*
■ = *montar con KIT 136 - mount with KIT 136 - monter avec le KIT 136 - mit KIT 136 montieren - montare con KIT 136 - montar com KIT 136*

			DURAVISION						DURAVISION FLEX						DURAVISION rear
120-160	78	82							DVF40	1+B6	DVF40	1+B6			
100 NX	91		DV53	H8	DV48	H8	DV50	H8	DVF53	1+U10	DVF48	1+U10	DVF50	1+U10	
200 SX	86	94	DV50	H8	DV48	H8	DV48	H8	DVF50	1+U10	DVF48	1+U10	DVF48	1+U10	
200 SX	95		DV55	H8	DV53	H8	DV48	H8	DVF55	1+U10	DVF53	1+U10	DVF48	1+U10	
300 ZX	86	94	DV50	H8	DV48	H8	DV48	H8	DVF50	1+U10	DVF48	1+U10	DVF48	1+U10	
300 ZX	95		DV55	H8	DV53	H8	DV53	H8	DVF55	1+U10	DVF53	1+U10	DVF53	1+U10	
350 Z	6.03		DV50	H8	DV45	H8	DV45	H8	DVF50	1+U10	DVF45	1+U10	DVF45	1+U10	
350 Z Roadster	6.05		DV50	H8	DV45	H8			DVF50	1+U10	DVF45	1+U10			
370 Z	6.09		DV53	H8	DV45	H8	DV45	H8	DVF53	1+U10	DVF45	1+U10	DVF45	1+U10	
Almera	10.95	3.00	DV53	H8	DV48	H8	DV28	H8	DVF53	1+U10	DVF48	1+U10	DVF35	1+U10	
Almera (3/5dr)	3.00		DV53	H8	DV40	H8	DV28	H8	DVF53	1+U10	DVF40	1+U10			DVR35
Almera Tino	8.00		DV65	H8	DV45	H8	DV50	H8	DVF65	1+U10	DVF45	1+U10	DVF50	1+U10	
Almera (4dr)	7.00		DV55	H8	DV40	H8			DVF55	1+U10	DVF40	1+U10			
Bluebird	89		DV48	H8	DV48	H8	DV48	H8	DVF48	1+U10	DVF48	1+U10	DVF48	1+U10	
Cherry	85		DV50	H8	DV50	H8			DVF50	1+U10	DVF50	1+U10			
Cube	3.10		DV50	H8	DV50	H8			DVF50	1+U10	DVF50	1+U10			
GT-R	2.09		DV55	H8	DV48	H8			DVF55	1+U10	DVF48	1+U10			
Juke	6.10		DV55	H8	DV35	H8			DVF55	1+U10	DVF35	1+U10			
Leaf	11.10		DV65	H8	DV40	H8			DVF65	1+U10	DVF40	1+U10			
Máxima	89	94	DV53	H8	DV50	H8			DVF53	1+U10	DVF50	1+U10			
Máxima	95		DV65	H8	DV40	H8			DVF65	1+U10	DVF43	1+U10			
Micra	1.93	4.98	DV50	H8	DV45	H8	DV45	H8	DVF50	1+U10	DVF45	1+U10	DVF45	1+U10	
Micra	5.98	2.03	DV50	H8	DV45	H8	DV40	H8	DVF50	1+U10	DVF45	1+U10	DVF40	1+U10	DVR40
Micra	2.03	5.10	DV53	H8	DV45	H8			DVF53	1+U10	DVF45	1+U10			DVR40
Micra	5.10		DV53	H8	DV35	H8			DVF53	1+U10	DVF35	1+U10			
Murano	10.08		DV65	H8	DV40	H8			DVF65	1+U10	DVF40	1+U10			
Navara	10.04		DV60	H8	DV48	H8			DVF60	1+U10	DVF48	1+U10			
Note	3.06	9.13	DV60	H8	DV35	H8			DVF60	1+U10	DVF35	1+U10			
Note	9.13		DV65	H8	DV40	H8			DVF65	1+U10	DVF40	1+U10			
NP300	5.08		DV48	H8	DV48	H8			DVF48	1+U10	DVF48	1+U10			
NV200	2.10		DV55	H8	DV40	H8			DVF55	1+U10	DVF40	1+U10			
Pathfinder	1.99	3.05	DV55	H8	DV53	H8	DV28	H8	DVF55	1+U10	DVF53	1+U10			
Pathfinder	3.05		DV60	H8	DV48	H8			DVF60	1+U10	DVF48	1+U10			
Patrol	79	86	DV40	H8	DV40	H8			DVF40	1+U10	DVF40	1+U10			
Patrol	86	89	DV45	H8	DV45	H8			DVF45	1+U10	DVF45	1+U10			
Patrol	89		DV45	H8	DV45	H8	DV28	H8	DVF45	1+U10	DVF45	1+U10	DVF35	1+U10	
Patrol GR	2.93	5.98	DV45	H8	DV45	H8	DV28	H8	DVF45	1+U10	DVF45	1+U10			
Patrol GR	5.98		DV48	H8	DV50	H8	DV28	H8	DVF48	1+U10	DVF50	1+U10	DVF35	1+U10	
Pick-up	1.97	10.04	DV48	H8	DV48	H8			DVF48	1+U10	DVF48	1+U10			
Pixo	6.09		DV53	H8	DV35	H8			DVF53	1+U10	DVF35	1+U10			DVR35
Prairie	85		DV40	H8	DV40	H8	DV40	H8	DVF40	1+U10	DVF40	1+U10	DVF40	1+U10	
Primastar	9.02		DV60	H8	DV50	H8	DV40	H8	DVF60	1+U10	DVF50	1+U10	DVF40	1+U10	DVR40
Primera	91	95	DV53	H8	DV48	H8	DV53	H8	DVF53	1+U10	DVF48	1+U10	DVF53	1+U10	
Primera	96	4.02	DV53	H8	DV50	H8	DV53	H8	DVF53	1+U10	DVF50	1+U10	DVF53	1+U10	
Primera	4.02		DV65	H8	DV48	H8			DVF65	1+U10	DVF48	1+U10			
Primera Sport Wagon	98	4.02	DV53	H8	DV50	H8	DV40	H8	DVF53	1+U10	DVF50	1+U10	DVF40	1+U10	
Primera Sport Wagon	4.02		DV65	H8	DV48	H8			DVF65	1+U10	DVF48	1+U10			DVR40
Qashqai / Qashqai +2	2.07								DVF60	4	DVF38	4			
Serena	10.92		DV60	H8	DV60	H8	DV40	H8	DVF60	1+U10	DVF60	1+U10	DVF40	1+U10	
Stanza	81								DVF40	1+B6	DVF40	1+B6			
Sunny	78	82							DVF40	1+B6	DVF40	1+B6			
Sunny	85	89	DV50	H8	DV48	H8	DV28	H8	DVF50	1+U10	DVF48	1+U10	DVF35	1+U10	
Sunny	89	90	DV50	H8	DV50	H8	DV45	H8	DVF50	1+U10	DVF50	1+U10	DVF45	1+U10	
Sunny SW	86		DV50	H8	DV48	H8	DV48	H8	DVF50	1+U10	DVF48	1+U10	DVF48	1+U10	
Terrano	89		DV48	H8	DV48	H8			DVF48	1+U10	DVF48	1+U10			
Terrano II	2.93		DV53	H8	DV50	H8			DVF53	1+U10	DVF50	1+U10			
Vanette	6.81	10.86							DVF40	1+B6	DVF40	1+B6			
Vanette	10.86	1.95	DV45	H8	DV45	H8			DVF45	1+U10	DVF45	1+U10			
X-Trail	7.01	6.07	DV60	H8	DV35	H8	DV40	H8	DVF60	1+U10	DVF38	1+U10	DVF40	1+U10	
X-Trail	6.07		DV60	H8	DV40	H8			DVF60	1+U10	DVF40	1+U10			
Interstar	7.02	10.11	DV60	U8■	DV60	U8■			DVF60	1+U8■	DVF60	1+U8■			
NV400	10.11		DV65	H8	DV65	H8			DVF65	1+U10	DVF65	1+U10			
Vanette Cargo	1.95		DV60	H8	DV60	H8	DV40	H8	DVF60	1+U10	DVF60	1+U10	DVF40	1+U10	
OPEL															
Adam	10.12								DVF65	3	DVF40	3			
Agila	4.00	9.07	DV50	H8	DV45	H8	DV28	H8	DVF50	1+U10	DVF45	1+U10	DVF35	1+U10	
Agila	9.07		DV55	H8	DV40	H8			DVF55	1+U10	DVF40	1+U10			
Ampera	11.11								DVF65	3	DVF65	3			
Antara	5.06		DV60	H8	DV40	H8			DVF60	1+U10	DVF40	1+U10			

● = *montar con KIT 133 - mount with KIT 133 - monter avec le KIT 133 - mit KIT 133 montieren - montare con KIT 133 - montar com KIT 133*
■ = *montar con KIT 136 - mount with KIT 136 - monter avec le KIT 136 - mit KIT 136 montieren - montare con KIT 136 - montar com KIT 136*

Ascona	75		DV45	H8	DV45	H8	DV48	H8	DVF45	1+U10	DVF45	1+U10	DVF48	1+U10	
Astra	91	97	DV45	H8	DV45	H8	DV45	H8	DVF45	1+U10	DVF45	1+U10	DVF45	1+U10	
Astra (3/5dr)	97	4.04	DV50	H8	DV48	H8			DVF50	1+U10	DVF48	1+U10			DVR40
Astra (5dr)	4.04	12.09							DVF55	2	DVF45	2			
Astra (5dr)	12.09								DVF65	3	DVF60	3			
Astra Caravan	92	5.98	DV45	H8	DV45	H8	DV45	H8	DVF45	1+U10	DVF45	1+U10	DVF45	1+U10	
Astra Caravan	5.98	10.04	DV50	H8	DV48	H8			DVF50	1+U10	DVF48	1+U10			DVR40
Astra Coupe	10.00	3.05	DV50	H8	DV48	H8			DVF50	1+U10	DVF48	1+U10			
Astra GTC	3.05	10.11							DVF55	2	DVF45	2			
Astra GTC	10.11								DVF70	3	DVF60	3			
Astra Sedán	9.98	2.07	DV50	H8	DV48	H8			DVF50	1+U10	DVF48	1+U10			
Astra Sedán	2.07	6.12							DVF55	2	DVF45	2			
Astra Sports Tourer	10.10								DVF65	3	DVF60	3			
Astra SW	10.04	10.10							DVF55	2	DVF45	2			
Astra TwinTop	5.06								DVF55	2	DVF45	2			
Bitter Diplomat	73		DV50	H8	DV50	H8			DVF50	1+U10	DVF50	1+U10			
Calibra	90		DV48	H8	DV48	H8	DV48	H8	DVF48	1+U10	DVF48	1+U10	DVF48	1+U10	
Cascada Cabrio	3.13								DVF65	3	DVF60	3			
Combo	10.01		DV50	H8	DV40	H8	DV35	H8	DVF50	1+U10	DVF40	1+U10	DVF35	1+U10	DVR40
Commodore	72		DV45	H8	DV45	H8			DVF45	1+U10	DVF45	1+U10			
Corsa	82	3.93	DV45	H8	DV45	H8	DV28	H8	DVF45	1+U10	DVF45	1+U10	DVF35	1+U10	
Corsa	4.93	12.96	DV45	H8	DV45	H8	DV28	H8	DVF45	1+U10	DVF45	1+U10	DVF35	1+U10	
Corsa (3dr)	12.96	9.00	DV45	H8	DV45	H8	DV40	H8	DVF45	1+U10	DVF45	1+U10	DVF40	1+U10	
Corsa (5dr)	12.96	9.00	DV45	H8	DV45	H8	DV35	H8	DVF45	1+U10	DVF45	1+U10	DVF35	1+U10	
Corsa	10.00	7.06	DV50	H8	DV45	H8			DVF50	1+U10	DVF45	1+U10			DVR40
Corsa	7.06								DVF65	4	DVF40	4			
Corsa Combo	95		DV45	H8	DV45	H8			DVF45	1+U10	DVF45	1+U10			
Frontera	92	11.98	DV48	H8	DV48	H8	DV28	H8	DVF48	1+U10	DVF48	1+U10			
Frontera	11.98		DV48	H8	DV48	H8	DV28	H8	DVF48	1+U10	DVF48	1+U10	DVF35	1+U10	
GT	9.68	8.73	DV40	H8	DV40	H8			DVF40	1+U10	DVF40	1+U10			
GT	6.07		DV40	H8	DV55	H8			DVF40	1+U10	DVF55	1+U10			
Insignia	7.08		DV60	H8	DV45	H8			DVF60	1+U10	DVF45	1+U10			
Insignia Sports Tourer	7.08		DV60	H8	DV45	H8			DVF60	1+U10	DVF45	1+U10			
Kadett	79	84	DV40	H8	DV40	H8	DV40	H8	DVF40	1+U10	DVF40	1+U10	DVF40	1+U10	
Kadett	85		DV45	H8	DV45	H8	DV40	H8	DVF45	1+U10	DVF45	1+U10	DVF40	1+U10	
Meriva	4.03	6.10	DV60	H8	DV60	H8			DVF60	1+U10	DVF60	1+U10			
Meriva	6.10								DVF65	3	DVF58	3			DVR40
Mokka	6.12								DVF65	3	DVF35	3			
Monterey	93		DV50	H8	DV50	H8	DV40	H8	DVF50	1+U10	DVF50	1+U10	DVF40	1+U10	
Monza	77		DV45	H8	DV45	H8	DV48	H8	DVF45	1+U10	DVF45	1+U10	DVF48	1+U10	
Omega	77	86	DV45	H8	DV45	H8			DVF45	1+U10	DVF45	1+U10			
Omega	87	94	DV48	H8	DV48	H8	DV28	H8	DVF48	1+U10	DVF48	1+U10	DVF35	1+U10	
Omega	95		DV60	H8	DV48	H8	DV40	H8	DVF60	1+U10	DVF48	1+U10	DVF40	1+U10	
Omega Sport Wagon	97		DV60	H8	DV48	H8	DV35	H8	DVF60	1+U10	DVF48	1+U10	DVF35	1+U10	
Rekord	72		DV45	H8	DV45	H8			DVF45	1+U10	DVF45	1+U10			
Senator	77	89	DV45	H8	DV45	H8			DVF45	1+U10	DVF45	1+U10			
Senator	89		DV48	H8	DV48	H8			DVF48	1+U10	DVF48	1+U10			
Signum	4.03		DV60	H8	DV48	H8			DVF60	1+U10	DVF48	1+U10			
Sintra	97		DV60	H8	DV60	H8	DV40	H8	DVF60	1+U10	DVF60	1+U10	DVF40	1+U10	
Tigra	95	9.04	DV45	H8	DV45	H8	DV50	H8	DVF45	1+U10	DVF45	1+U10	DVF50	1+U10	
Tigra Twin Top	9.04		DV50	H8	DV45	H8			DVF50	1+U10	DVF45	1+U10			
Vectra	88	89	DV45	H8	DV45	H8			DVF45	1+U10	DVF45	1+U10			
Vectra	89	96	DV48	H8	DV48	H8	DV48	H8	DVF48	1+U10	DVF48	1+U10	DVF48	1+U10	
Vectra	12.96	4.02	DV48	H8	DV48	H8	DV48	H8	DVF48	1+U10	DVF48	1+U10	DVF48	1+U10	
Vectra	4.02		DV60	H8	DV48	H8			DVF60	1+U10	DVF48	1+U10			DVR40
Vectra Caravan	97	11.03	DV48	H8	DV48	H8	DV28	H8	DVF48	1+U10	DVF48	1+U10	DVF35	1+U10	
Vectra Caravan	11.03		DV60	H8	DV48	H8			DVF60	1+U10	DVF48	1+U10			
Vivaro Combi	8.01		DV60	H8	DV53	H8			DVF60	1+U10	DVF53	1+U10			DVR40
Zafira	4.99	9.05	DV60	H8	DV60	H8			DVF60	1+U10	DVF60	1+U10			DVR40
Zafira	9.05	10.11							DVF70	4	DVF55	4			DVR35
Zafira	10.11								DVF70	3	DVF70	3			
Zafira Tourer C	10.11								DVF80	S2S	DVF70	3			
Movano	4.10		DV65	H8	DV65	H8			DVF65	1+U10	DVF65	1+U10			
PEUGEOT															
104	72	81							DVF35	1+B6	DVF35	1+B6	DVF35	1+B6	
106	91	94	DV45	H8	DV45	H8	DV40	H8	DVF45	1+U10	DVF45	1+U10	DVF40	1+U10	
106	95		DV50	H8	DV45	H8	DV40	H8	DVF50	1+U10	DVF45	1+U10	DVF40	1+U10	DVR35
107	6.05		DV65	H8					DVF65	1+U10					DVR30
204	71	81							DVF35	1+B6	DVF35	1+B6			

● = *montar con KIT 133 - mount with KIT 133 - monter avec le KIT 133 - mit KIT 133 montieren - montare con KIT 133 - montar com KIT 133*
■ = *montar con KIT 136 - mount with KIT 136 - monter avec le KIT 136 - mit KIT 136 montieren - montare con KIT 136 - montar com KIT 136*

			DURAVISION						DURAVISION FLEX						DURAVISION rear
205	83		DV45	H8	DV45	H8	DV40	H8	DVF45	1+U10	DVF45	1+U10	DVF40	1+U10	
206	10.98		DV65	H8	DV40	H8			DVF65	1+U10	DVF40	1+U10			DVR35
206 CC	01		DV65	H8	DV40	H8			DVF65	1+U10	DVF40	1+U10			
206 SW	5.02		DV60	H8	DV45	H8			DVF60	1+U10	DVF45	1+U10			DVR35
206+	1.09		DV65	H8	DV40	H8			DVF65	1+U10	DVF40	1+U10			DVR35
207	2.06								DVF65	2	DVF40	2			
207 CC	1.07								DVF65	2	DVF40	2			
207 SW	6.07								DVF65	2	DVF40	2			
208	3.12								DVF65	3	DVF40	3			DVR35
304	71	81							DVF35	1+B6	DVF35	1+B6			
305	78		DV40	H8	DV40	H8			DVF40	1+U10	DVF40	1+U10			
306	3.93		DV55	H8	DV50	H8	DV50	H8	DVF55	1+U10	DVF50	1+U10	DVF50	1+U10	DVR40
307	6.01	5.05	DV65	H8	DV65	H8			DVF70	1+U10	DVF65	1+U10			DVR35
307	5.05								DVF70	4	DVF65	4			DVR35
307 CC	10.03								DVF70	4	DVF60	4			
307 SW	5.02	5.05	DV65	H8	DV65	H8			DVF70	1+U10	DVF65	1+U10			DVR35
307 SW	5.05								DVF70	4	DVF65	4			DVR35
308	03.08								DVF75	2S2	DVF65	3			
308 CC	4.09								DVF70	3	DVF65	3			
308 SW	03.08								DVF75	2S2	DVF65	3			
309	86		DV45	H8	DV45	H8	DV45	H8	DVF45	1+U10	DVF45	1+U10	DVF45	1+U10	
405	10.88	2.90	DV55	H8	DV55	H8									
406	11.95		DV60	H8	DV55	H8			DVF60	1+U10	DVF55	1+U10			
406 Coupe	97		DV65	H8	DV50	H8			DVF65	1+U10	DVF50	1+U10			
406 SW	10.96		DV60	H8	DV55	H8			DVF60	1+U10	DVF55	1+U10			
407	4.04								DVF70	2	DVF70	2			
407 Coupe	2.06								DVF70	2	DVF70	2			
407 SW	11.04								DVF70	2	DVF70	2			
504	68	80							DVF40	1+B6	DVF40	1+B6			
504	81		DV40	H8	DV40	H8			DVF40	1+U10	DVF40	1+U10			
505	79		DV45	H8	DV45	H8	DV45	H8	DVF45	1+U10	DVF45	1+U10	DVF45	1+U10	
508	11.10								DVF65	3	DVF65	3			
508 SW	11.10								DVF65	3	DVF65	3			
604	75		DV45	H8	DV45	H8			DVF45	1+U10	DVF45	1+U10			
605	8.89		DV55	H8	DV55	H8			DVF55	1+U10	DVF55	1+U10			
607	2.00		DV65	H8	DV53	H8			DVF65	1+U10	DVF53	1+U10			
806	95		DV65	H8	DV50	H8	DV40	H8	DVF65	1+U10	DVF50	1+U10	DVF40	1+U10	
807	10.02														DVR35
1007	6.05		DV60	H8	DV45	H8			DVF60	1+U10	DVF45	1+U10			
2008	5.13								DVF65	3	DVF40	3			
3008	1.09								DVF80	2S2	DVF70	3			
4007	2.07		DV60	H8	DV53	H8			DVF60	1+U10	DVF53	1+U10			
4008	5.12		DV60	H8	DV53	H8			DVF60	1+U10	DVF53	1+U10			
5008	1.09								DVF80	2S2	DVF70	3			
Bipper	2.08								DVF65	5	DVF45	5			
iOn	11.10		DV70	H8					DVF70	1+U10					
Partner	9.96	4.08	DV55	H8	DV55	H8	DV40	H8	DVF55	1+U10	DVF55	1+U10	DVF40	1+U10	
Partner Van	4.08								DVF65	3	DVF40	3			DVR35
Partner Tepee	4.08								DVF65	3	DVF40	3			DVR35
RCZ	3.10								DVF65	3	DVF65	3			
Boxer	95	4.06	DV55	H8	DV55	H8			DVF55	1+U10	DVF55	1+U10			
Boxer	4.06								DVF65	3	DVF55	3			
Expert	95	1.07	DV65	H8	DV50	H8	DV40	H8	DVF65	1+U10	DVF50	1+U10	DVF40	1+U10	
Expert	1.07		DV65	H8	DV50	H8			DVF65	1+U10	DVF50	1+U10			DVR35
PIAGGIO															
Porter	95		DV40	H8	DV40	H8			DVF40	1+U10	DVF40	1+U10			
PORSCHE															
911	93	9.97	DV35	H8	DV35	H8	DV40	H8	DVF35	1+U10	DVF35	1+U10	DVF40	1+U10	
911	9.97	7.04	DV55	H8	DV53	H8			DVF55	1+U10	DVF53	1+U10			
911	7.04	11.11	DV55	H8	DV50	H8			DVF55	1+U10	DVF50	1+U10			
924	75		DV48	H8	DV48	H8	DV48	H8	DVF48	1+U10	DVF48	1+U10	DVF48	1+U10	
928	77		DV45	H8/H1	DV45	H8/H1			DVF45	1+U10	DVF45	1+U10			
928	85		DV48	H8	DV48	H8			DVF48	1+U10	DVF48	1+U10			
928 GTS	93		DV48	H8	DV48	H8			DVF48	1+U10	DVF48	1+U10			
944	75		DV45	H1	DV45	H1	DV45	H1							
Boxster	9.96	11.04	DV55	H8	DV53	H8			DVF55	1+U10	DVF53	1+U10			
Boxster	11.04	4.12	DV55	H8	DV50	H8			DVF55	1+U10	DVF50	1+U10			

● = *montar con KIT 133 - mount with KIT 133 - monter avec le KIT 133 - mit KIT 133 montieren - montare con KIT 133 - montar com KIT 133*
■ = *montar con KIT 136 - mount with KIT 136 - monter avec le KIT 136 - mit KIT 136 montieren - montare con KIT 136 - montar com KIT 136*

Carrera GT	7.03		DV55	H8					DVF55	1+U10				
Cayenne	1.03	6.10							DVF65	2	DVF65	2		
Cayenne	6.10								DVF60	2	DVF60	2		
Panamera	9.09		DV55	H8	DV50	H8			DVF58	1+U10	DVF50	1+U10		
RENAULT														
Alpine 1600	75	78	DV28	H8	DV28	H8								
Alpine A110	71		DV40	H8	DV40	H8			DVF40	1+U10	DVF40	1+U10		
Alpine A610	4.91		DV55	H8	DV55	H8			DVF55	1+U10	DVF55	1+U10		
Avantime	9.01		DV65	H8	DV45	H8			DVF65	1+U10	DVF45	1+U10		
Captur	3.13								DVF65	5	DVF35	5		
Clio I	90	94	DV45	H8	DV45	H8			DVF45	1+U10	DVF45	1+U10		
Clio I	95	4.98	DV50	H8	DV50	H8	DV40	H8	DVF50	1+U10	DVF50	1+U10	DVF40	1+U10
Clio II	5.98	9.05	DV53	H8	DV45	H8			DVF53	1+U10	DVF45	1+U10		
Clio III	9.05	11.12							DVF60	5	DVF40	5		DVR35
Clio IV	11.12								DVF65	5	DVF35	5		
Clio Grand Tour	2.08	11.12							DVF60	5	DVF40	5		
Clio Grand Tour IV	11.12								DVF65	5	DVF35	5		
Espace I	84	3.89	DV55	H8	DV55	H8			DVF55	1+U10	DVF55	1+U10		
Espace II	4.89	97	DV60	U8l	DV60	U8l			DVF60	1+U10	DVF60	1+U8l		
Espace III	98	11.02	DV65	U8l	DV45	U8l			DVF65	1+U10	DVF45	1+U8l		DVR40
Espace IV	11.02	02.05							DVF75	2S1	DVF70	2		DVR35
Fluence	2.10								DVF65	5	DVF40	5		
Grand Scénic	12.04	2.09							DVF65	5	DVF55	5		
Grand Scénic	2.09								DVF75	2S3	DVF65	5		
Kangoo (4dr)	98	2.08	DV50	H8	DV50	H8			DVF50	1+U10	DVF50	1+U10		
Kangoo (5dr)	11.97	2.08	DV50	H8	DV50	H8	DV35	H8	DVF50	1+U10	DVF50	1+U10	DVF38	1+U10
Kangoo Combi	2.08								DVF58	5	DVF53	5		
Koleos	9.08								DVF60	4	DVF48	4		
Laguna	1.94	01	DV60	H8	DV45	H8	DV55	H8	DVF60	1+U10	DVF45	1+U10	DVF55	1+U10
Laguna Coupe	3.08								DVF65	5	DVF40	5		
Laguna II	01	10.07	DV60	H8	DV50	H8			DVF60	1+U10	DVF50	1+U10		
Laguna II Grand Tour	01	10.07	DV60	H8	DV50	H8			DVF60	1+U10	DVF50	1+U10		DVR35
Laguna III	10.07								DVF65	5	DVF40	5		
Laguna III Grand Tour	10.07								DVF65	5	DVF40	5		
Latitude	2.11		DV60	H8	DV40	H8			DVF60	1+U10	DVF40	1+U10		
Mégane (4/5dr)	2.95	10.02	DV53	H8	DV50	H8			DVF53	1+U10	DVF50	1+U10		
Mégane	10.02	1.06	DV60	H8	DV45	H8			DVF60	1+U10	DVF45	1+U10		
Mégane	1.06	1.09							DVF60	5	DVF45	5		
Mégane (5dr)	1.09								DVF60	5	DVF40	5		
Mégane Cabrio	10.03	1.06	DV60	H8	DV45	H8			DVF60	1+U10	DVF45	1+U10		
Mégane Cabrio	1.06	6.10							DVF60	5	DVF45	5		
Mégane CC	6.10								DVF60	5	DVF40	5		
Mégane Coupe	2.95	10.02	DV55	H8	DV50	H8			DVF55	1+U10	DVF50	1+U10		DVR35
Mégane Coupe	1.09								DVF60	5	DVF40	5		
Mégane Grand Tour	9.03	1.06	DV60	H8	DV45	H8			DVF60	1+U10	DVF45	1+U10		
Mégane Grand Tour	1.06	1.09							DVF60	5	DVF45	5		
Mégane Sedan	9.03	1.06	DV60	H8	DV45	H8			DVF60	1+U10	DVF45	1+U10		
Mégane Sedan	1.06	6.09							DVF60	5	DVF45	5		
Mégane Sedan	6.09								DVF60	5	DVF45	5		
Mégane Sport Tourer	1.09								DVF60	5	DVF45	5		
Modus	10.04								DVF70	2	DVF60	2		
R 5	85		DV45	H8	DV45	H8	DV40	H8	DVF45	1+U10	DVF45	1+U10	DVF40	1+U10
R 6	69	78	DV28	H8	DV28	H8								
R 7		78	DV28	H8	DV28	H8								
R 8	63								DVF35	1+B6	DVF35	1+B6		
R 9	81		DV40	H8	DV40	H8			DVF40	1+U10	DVF40	1+U10		
R 10	7.69								DVF35	1+B6	DVF35	1+B6		
R 11	83		DV40	H8	DV40	H8	DV48	H8	DVF40	1+U10	DVF40	1+U10	DVF48	1+U10
R 14	76		DV40	H8	DV40	H8	DV40	H8	DVF40	1+U10	DVF40	1+U10	DVF40	1+U10
R 15	71	80	DV40	H8	DV40	H8			DVF40	1+U10	DVF40	1+U10		
R 16	65	79							DVF35	1+B6	DVF35	1+B6		
R 17	71	80	DV40	H8	DV40	H8			DVF40	1+U10	DVF40	1+U10		
R 18	78		DV40	H8	DV40	H8			DVF40	1+U10	DVF40	1+U10		
R 18 Break	78		DV40	H8	DV40	H8	DV40	H8	DVF40	1+U10	DVF40	1+U10	DVF40	1+U10
R 19	6.88		DV50	H8	DV50	H8	DV48	H8	DVF50	1+U10	DVF50	1+U10	DVF48	1+U10
R 20	75	83	DV45	H8	DV45	H8			DVF45	1+U10	DVF45	1+U10		
R 21	4.89		DV50	H8	DV50	H8			DVF50	1+U10	DVF50	1+U10		
R 21 (5dr)	5.89		DV50	H8	DV50	H8	DV48	H8	DVF50	1+U10	DVF50	1+U10	DVF48	1+U10
R 21 Nevada	5.89		DV50	H8	DV50	H8			DVF50	1+U10	DVF50	1+U10		

● = *montar con KIT 133 - mount with KIT 133 - monter avec le KIT 133 - mit KIT 133 montieren - montare con KIT 133 - montar com KIT 133*
■ = *montar con KIT 136 - mount with KIT 136 - monter avec le KIT 136 - mit KIT 136 montieren - montare con KIT 136 - montar com KIT 136*

			DURAVISION						DURAVISION FLEX						DURAVISION rear
R 25			DV55	H8	DV55	H8	DV55	H8	DVF55	1+U10	DVF55	1+U10	DVF55	1+U10	
R 30	75	83	DV45	H8	DV45	H8			DVF45	1+U10	DVF45	1+U10			
Savanna	5.89		DV50	H8	DV50	H8			DVF50	1+U10	DVF50	1+U10			
Scénic	1.97	6.03							DVF60	1+U10	DVF40	1+U10			DVR35
Scénic	12.04	2.09							DVF65	5	DVF55	5			
Scénic	1.09								DVF75	2S3	DVF65	5			
Scimitar	66	77							DVF35	1+B6	DVF35	1+B6			
Spider	1.97		DV55	H8					DVF58	1+U10					
Trafic	3.01		DV60	H8	DV53	H8			DVF60	1+U10	DVF53	1+U10			
Twingo	93	3.07	DV65	H8					DVF65	1+U10					DVR30
Twingo	3.07								DVF60	3	DVF40	3			DVR30
Twizy	4.12		DV45	H8					DVF45	1+U10					
Vel Satis	5.02								DVF70	2	DVF65	2			
Wind	7.10								DVF60	3	DVF40	3			
Zoe	6.12								DVF60	5	DVF35	5			
Express	92		DV45	H8	DV45	H8			DVF45	1+U10	DVF45	1+U10			
Kangoo Express	2.08		DV55	H8	DV55	H8			DVF55	1+U10	DVF55	1+U10			
Mascott	1.99	6.04	DV60	U8■	DV60	U8■			DVF60	1+U8■	DVF60	1+U8■			
Master	7.98	2.10	DV60	U8■	DV60	U8■			DVF60	1+U8■	DVF60	1+U8■			
Master	2.10		DV65	H8	DV65	H8			DVF65	1+U10	DVF65	1+U10			
REVA															
REVAi / L-ion	08		DV55	H8					DVF55	1+U10					
ROLLS-ROYCE															
Corniche	71	86							DVF35	1+B6	DVF35	1+B6			
Silver Shadow	65								DVF35	1+B6	DVF35	1+B6			
Silver Spirit	81		DV45	H8/H1	DV45	H8/H1			DVF45	1+U10	DVF45	1+U10			
Silver Spur	81		DV45	H8/H1	DV45	H8/H1			DVF45	1+U10	DVF45	1+U10			
ROVER															
25	2.00		DV45	H8	DV45	H8	DV45	H8	DVF45	1+U10	DVF45	1+U10	DVF45	1+U10	
45	2.00		DV50	H8	DV45	H8			DVF50	1+U10	DVF45	1+U10			
75	2.99		DV55	H8	DV55	H8			DVF55	1+U10	DVF55	1+U10			
2400 / 2600	84		DV45	H8	DV45	H8			DVF45	1+U10	DVF45	1+U10			
3500 / Vanden Plas	85		DV45	H8	DV45	H8			DVF45	1+U10	DVF45	1+U10			
MGF	4.96		DV50	H8	DV50	H8			DVF50	1+U10	DVF50	1+U10			
Serie 100	93		DV40	H1	DV40	H1	DV40	H1							
Serie 200	85	2.00	DV45	H8	DV45	H8	DV45	H8	DVF45	1+U10	DVF45	1+U10	DVF45	1+U10	
Serie 400	93	96	DV45	H8	DV45	H8	DV45	H8	DVF45	1+U10	DVF45	1+U10	DVF45	1+U10	
Serie 400	1.97	2.00	DV50	H8	DV45	H8	DV45	H8	DVF50	1+U10	DVF45	1+U10	DVF45	1+U10	
Serie 600	95		DV55	H8	DV50	H8			DVF55	1+U10	DVF50	1+U10			
Serie 800	89	4.92	DV48	H8	DV48	H8			DVF48	1+U10	DVF48	1+U10			
Serie 800	4.92		DV50	H8	DV50	H8			DVF50	1+U10	DVF50	1+U10			
SAAB															
9-3	3.98	9.02	DV53	H8	DV53	H8	DV50	H8	DVF53	1+U10	DVF53	1+U10	DVF50	1+U10	
9-3	9.02	2.08	DV55	H8	DV55	H8			DVF58	1+U10	DVF58	1+U10			
9-3	2.08								DVF58	4	DVF58	4			
9-3 Cabrio	2.98	10.03	DV53	H8	DV53	H8			DVF53	1+U10	DVF53	1+U10			
9-3 Cabrio	10.03	2.08	DV55	H8	DV55	H8			DVF58	1+U10	DVF58	1+U10			
9-3 Cabrio	2.08								DVF58	4	DVF58	4			
9-3 Sport Hach	8.05	2.08	DV55	H8	DV55	H8			DVF58	1+U10	DVF58	1+U10			
9-3 Sport Hach	2.08								DVF58	4	DVF58	4			
9-5	10.97		DV55	H8	DV55	H8			DVF58	1+U10	DVF58	1+U10			
9-5 SW	10.98		DV55	H8	DV55	H8			DVF58	1+U10	DVF58	1+U10			
900	78	94	DV40	H8	DV40	H8			DVF40	1+U10	DVF40	1+U10			
900	95		DV53	H8	DV53	H8	DV50	H8	DVF53	1+U10	DVF53	1+U10	DVF50	1+U10	
900 Turbo 16 Cabriolet	86	94	DV45	H8	DV45	H8			DVF45	1+U10	DVF45	1+U10			
9000	84		DV53	H8	DV53	H8	DV53	H8	DVF53	1+U10	DVF53	1+U10	DVF53	1+U10	
SANTANA															
Anibal	10.02		DV40	H8	DV45	H8			DVF40	1+U10	DVF45	1+U10			
SEAT															
124	72								DVF35	1+B6	DVF35	1+B6			
124 Sport									DVF35	1+B6	DVF35	1+B6			
128 Sport	77	79							DVF35	1+B6	DVF35	1+B6			
131	75	81							DVF35	1+B6	DVF35	1+B6			
131	81	84							DVF40	1+B6	DVF40	1+B6	DVF40	1+B6	
132	73	83							DVF35	1+B6	DVF35	1+B6			
133	74								DVF35	1+B6	DVF35	1+B6			

● = *montar con KIT 133 - mount with KIT 133 - monter avec le KIT 133 - mit KIT 133 montieren - montare con KIT 133 - montar com KIT 133*
■ = *montar con KIT 136 - mount with KIT 136 - monter avec le KIT 136 - mit KIT 136 montieren - montare con KIT 136 - montar com KIT 136*

850	74								DVF35	1+B6	DVF35	1+B6		
1430	68	72							DVF35	1+B6	DVF35	1+B6		
1500	65								DVF35	1+B6	DVF35	1+B6		
Alhambra	95	01	DV70	H12	DV70	H12	DV40	H8						
Alhambra	11.01	6.10							DVF70	2	DVF70	2		
Arosa	6.97		DV53	H8	DV48	H8			DVF53	1+U10	DVF48	1+U10		
Córdoba	1.94	99	DV53	H8	DV45	H8			DVF53	1+U10	DVF45	1+U10		
Córdoba	99	02	DV50	H8	DV45	H8			DVF50	1+U10	DVF45	1+U10		
Córdoba	12.02		DV53	H8	DV48	H8			DVF53	1+U10	DVF48	1+U10		
Córdoba Vario	99		DV53	H8	DV45	H8			DVF53	1+U10	DVF45	1+U10		
Exeo	09	11							DVF55	7	DVF55	7		
Exeo ST	09								DVF55	7	DVF55	7		
Fura	81								DVF35	1+B6	DVF35	1+B6		
Ibiza I	84	88	DV45	H8			DV45	H8	DVF45	1+U10			DVF45	1+U10
Ibiza I	89	92	DV50	H8			DV45	H8	DVF50	1+U10			DVF45	1+U10
Ibiza II	92	4.99	DV50	H8	DV50	H8	DV35	H8	DVF50	1+U10	DVF50	1+U10	DVF35	1+U10
Ibiza III	5.99	3.02	DV53	H8	DV48	H8	DV28	H8	DVF53	1+U10	DVF48	1+U10	DVF35	1+U10
Ibiza IV	3.02	1.06	DV53	H8	DV48	H8	DV35	H8	DVF53	1+U10	DVF48	1+U10	DVF35	1+U10
Ibiza IV	1.06	3.08							DVF53	2	DVF48	2		
Ibiza V (5dr)	3.08								DVF60	3	DVF40	3		
Ibiza V SC	3.08								DVF60	3	DVF40	3		
Ibiza V ST	3.10								DVF60	3	DVF40	3		
León	10.99	7.05	DV53	H8	DV48	H8			DVF53	1+U10	DVF48	1+U10		
León	7.05	9.12							DVF65	4	DVF65	4		
León	9.12								DVF65	6	DVF40	6		
Málaga	85	88	DV40	H8	DV40	H8			DVF40	1+U10	DVF40	1+U10		
Málaga	89		DV45	H8	DV45	H8			DVF45	1+U10	DVF45	1+U10		
Marbella	83		DV40	H8			DV28	H8	DVF40	1+U10			DVF35	1+B6
Panda	10.80	9.03	DV40	H8			DV28	H8	DVF40	1+U10			DVF35	1+B6
Ritmo		83							DVF35	1+B6	DVF35	1+B6		
Ritmo	84		DV40	H8	DV40	H8	DV40	H8	DVF40	1+U10	DVF40	1+U10	DVF40	1+U10
Ronda	82	83							DVF35	1+B6	DVF35	1+B6		
Ronda	84		DV40	H8	DV40	H8	DV40	H8	DVF40	1+U10	DVF40	1+U10	DVF40	1+U10
Terra	12.86								DVF40	1+B6				
Toledo I	12.98	11.04	DV53	H8	DV48	H8			DVF53	1+U10	DVF48	1+U10		
Toledo II	91	11.98	DV50	H8	DV50	H8			DVF50	1+U10	DVF50	1+U10		
Toledo IV	7.12								DVF60	6	DVF40	6		
Inca	11.95		DV53	H8	DV45	H8	DV45	H8	DVF53	1+U10	DVF45	1+U10	DVF45	1+U10
Terra	12.86		DV40	H8					DVF40	1+U10				
Trans	82	12.86	DV40	H8					DVF40	1+B6				
SKODA														
105	76								DVF40	1+B6	DVF40	1+B6		
120	76								DVF40	1+B6	DVF40	1+B6		
120-130	86								DVF40	1+B6	DVF40	1+B6		
136 Rapid	81								DVF40	1+B6	DVF40	1+B6		
Citigo	10.11								DVF60	6	DVF40	6		
Fabia	3.07								DVF53	3	DVF53	3		
Fabia (4dr/5dr/Combi)	12.99	3.07	DV53	H8	DV48	H8			DVF53	1+U10	DVF48	1+U10		
Fabia Combi	3.07								DVF53	3	DVF53	3		
Favorit	90	92	DV45	H8	DV45	H8	DV40	H8	DVF45	1+U10	DVF45	1+U10	DVF40	1+U10
Favorit	93		DV50	H8	DV50	H8	DV40	H8	DVF50	1+U10	DVF50	1+U10	DVF40	1+U10
Felicia	4.95		DV50	H8	DV50	H8	DV40	H8	DVF50	1+U10	DVF50	1+U10	DVF40	1+U10
Forman	91	95	DV45	H8	DV45	H8	DV40	H8	DVF45	1+U10	DVF45	1+U10	DVF40	1+U10
Forman	95		DV50	H8	DV50	H8	DV40	H8	DVF50	1+U10	DVF50	1+U10	DVF40	1+U10
Garde Coupe	81								DVF40	1+B6	DVF40	1+B6		
Octavia	96	6.04	DV53	H8	DV48	H8			DVF53	1+U10	DVF48	1+U10		
Octavia	6.04	3.13							DVF60	2	DVF48	2		
Octavia Combi	7.98	1.05	DV53	H8	DV48	H8	DV28	H8	DVF53	1+U10	DVF48	1+U10	DVF35	1+U10
Octavia Combi	1.05	3.13							DVF60	2	DVF48	2		
Rapid	7.12								DVF60	6	DVF40	6		
Roomster	9.06								DVF53	3	DVF53	3		
Superb	5.02	3.08							DVF53	2	DVF50	2		
Superb	3.08								DVF60	3	DVF45	3		
Superb Combi	10.09								DVF60	3	DVF45	3		
Yeti	5.09								DVF60	3	DVF48	3		
SMART														
City-Coupe / Fortwo	7.98	1.07	DV53	H8	DV53	H8			DVF53	1+U10	DVF53	1+U10		
Forfour	4.04		DV65	H8	DV45	H8			DVF65	1+U10	DVF45	1+U10		
Fortwo	1.07								DVF55	4	DVF53	4		

● = *montar con KIT 133 - mount with KIT 133 - monter avec le KIT 133 - mit KIT 133 montieren - montare con KIT 133 - montar com KIT 133*
■ = *montar con KIT 136 - mount with KIT 136 - monter avec le KIT 136 - mit KIT 136 montieren - montare con KIT 136 - montar com KIT 136*

			DURAVISION						DURAVISION FLEX						DURAVISION rear
Roadster Cabrio	4.03		DV50	H8	DV45	H8			DVF50	1+U10	DVF45	1+U10			
Roadster Coupe	4.03		DV50	H8	DV45	H8			DVF50	1+U10	DVF45	1+U10			
SSANGYONG															
Actyon	10.06		DV55	H8	DV48	H8	DV50	H8	DVF55	1+U10	DVF48	1+U10	DVF50	1+U10	
Actyon Sports	4.07		DV55	H8	DV48	H8			DVF55	1+U10	DVF48	1+U10			
Family	88	95	DV48	H8	DV48	H8			DVF48	1+U10	DVF48	1+U10			
Korando	96	11.10	DV45	H8	DV45	H8			DVF45	1+U10	DVF45	1+U10			
Korando	11.10		DV60	H8	DV40	H8			DVF60	1+U10	DVF40	1+U10			
Kyron	5.05		DV55	H8	DV48	H8	DV35	H8	DVF55	1+U10	DVF48	1+U10	DVF35	1+U10	
Musso	95	97	DV50	H8	DV50	H8	DV28	H8	DVF50	1+U10	DVF50	1+U10	DVF35	1+U10	
Musso	98		DV50	H8	DV45	H8	DV35	H8	DVF50	1+U10	DVF45	1+U10	DVF35	1+U10	
Musso Sports Pick-up	2.04		DV50	H8	DV45	H8			DVF50	1+U10	DVF45	1+U10			
Rexton	7.02		DV50	H8	DV50	H8	DV35	H8	DVF50	1+U10	DVF50	1+U10	DVF35	1+U10	
Rodius	5.05	6.13	DV60	H8	DV45	H8	DV28	H8	DVF60	1+U10	DVF45	1+U10			
Rodius	6.13		DV60	H8	DV45	H8			DVF60	1+U10	DVF45	1+U10			
SUBARU															
BRZ	6.12		DV55	H8	DV50	H8			DVF55	1+U10	DVF50	1+U10			
Forester	8.97	1.08	DV53	H8	DV48	H8	DV40	H8	DVF53	1+U10	DVF48	1+U10	DVF40	1+U10	
Forester	1.08		DV60	H8	DV45	H8			DVF60	1+U10	DVF45	1+U10			
Impreza	93	12.00	DV53	H8	DV45	H8			DVF53	1+U10	DVF45	1+U10			
Impreza	12.00	1.08	DV55	H8	DV40	H8			DVF55	1+U10	DVF40	1+U10			
Impreza	1.08		DV60	H8	DV40	H8			DVF60	1+U10	DVF40	1+U10			
Impreza SW	93	12.00	DV53	H8	DV45	H8	DV40	H8	DVF53	1+U10	DVF45	1+U10	DVF40	1+U10	
Impreza SW	12.00		DV55	H8	DV40	H8	DV35	H8	DVF55	1+U10	DVF40	1+U10	DVF38	1+U10	
Justy	89		DV45	H8	DV40	H8	DV40	H8	DVF45	1+U10	DVF40	1+U10	DVF40	1+U10	
Justy	1.07		DV50	H8	DV40	H8			DVF50	1+U10	DVF40	1+U10			
Legacy	91	94	DV50	H8	DV45	H8	DV35	H8	DVF50	1+U10	DVF45	1+U10	DVF38	1+U10	
Legacy	95	10.98	DV53	H8	DV48	H8	DV40	H8	DVF53	1+U10	DVF48	1+U10	DVF40	1+U10	
Legacy	10.98	8.03	DV55	H8	DV50	H8			DVF55	1+U10	DVF50	1+U10			
Legacy	8.03	9.09	DV60	H8	DV45	H8			DVF60	1+U10	DVF45	1+U10			
Legacy	9.09		DV65	H8	DV48	H8			DVF65	1+U10	DVF48	1+U10			
Legacy SW	12.98	8.03	DV55	H8	DV50	H8	DV35	H8	DVF55	1+U10	DVF50	1+U10	DVF38	1+U10	
Legacy SW	8.03	9.09	DV60	H8	DV45	H8			DVF60	1+U10	DVF45	1+U10			
Legacy SW	9.09		DV65	H8	DV48	H8			DVF65	1+U10	DVF48	1+U10			
Outback	3.99	8.03	DV55	H8	DV50	H8	DV35	H8	DVF55	1+U10	DVF50	1+U10	DVF38	1+U10	
Outback	8.03	9.09	DV60	H8	DV45	H8			DVF60	1+U10	DVF45	1+U10			
Outback	9.09		DV65	H8	DV48	H8			DVF65	1+U10	DVF48	1+U10			
R1	11.06		DV55	H8	DV35	H8			DVF55	1+U10	DVF35	1+U10			
SVX	93		DV55	H8	DV50	H8	DV45	H8	DVF55	1+U10	DVF50	1+U10	DVF45	1+U10	
Trezia	3.11		DV70	H8					DVF70	1+U10					
XV	3.12		DV65	H8	DV40	H8			DVF65	1+U10	DVF40	1+U10			
SUZUKI															
Alto	96	12.08	DV48	H8	DV40	H8	DV28	H8	DVF48	1+U10	DVF40	1+U10	DVF35	1+U10	
Alto	1.09		DV53	H8	DV35	H8			DVF53	1+U10	DVF35	1+U10			
Baleno	95		DV50	H8	DV45	H8	DV35	H8	DVF50	1+U10	DVF45	1+U10	DVF38	1+U10	
Baleno SW	95		DV50	H8	DV45	H8	DV28	H8	DVF50	1+U10	DVF45	1+U10			
Grand Vitara	11.98	9.05	DV48	H8	DV48	H8	DV35	H8	DVF48	1+U10	DVF48	1+U10	DVF38	1+U10	
Grand Vitara	9.05		DV48	H8	DV48	H8			DVF48	1+U10	DVF48	1+U10			
Ignis	10.00		DV48	H8	DV45	H8	DV28	H8	DVF48	1+U10	DVF45	1+U10			
Jimny	11.98		DV45	H8	DV40	H8	DV28	H8	DVF45	1+U10	DVF40	1+U10			
Kizashi	10.10		DV60	H8	DV50	H8			DVF60	1+U10	DVF50	1+U10			
Liana	7.01		DV55	H8	DV45	H8	DV28	H8	DVF55	1+U10	DVF45	1+U10			
Liana Sedán	5.02		DV55	H8	DV45	H8			DVF55	1+U10	DVF45	1+U10			
Samurai (Hard top)	81												DVF35	1+B6	
Splash	1.08		DV55	H8	DV40	H8			DVF55	1+U10	DVF40	1+U10			
Swift	89	4.05	DV53	H8	DV45	H8	DV40	H8	DVF53	1+U10	DVF45	1+U10	DVF40	1+U10	
Swift	4.05	10.10	DV53	H8	DV45	H8			DVF53	1+U10	DVF45	1+U10			
Swift	10.10		DV55	H8	DV40	H8			DVF55	1+U10	DVF43	1+U10			
SX4	6.06		DV65	H8	DV35	H8			DVF65	1+U10	DVF35	1+U10			
Vitara JHT	90		DV45	H8	DV45	H8	DV28	H8	DVF45	1+U10	DVF45	1+U10	DVF35	1+U10	
Vitara V	90		DV45	H8	DV45	H8	DV35	H8	DVF45	1+U10	DVF45	1+U10	DVF38	1+U10	
Wagon R+	5.00		DV50	H8	DV45	H8	DV28	H8	DVF50	1+U10	DVF45	1+U10	DVF35	1+U10	
Wagon R+	6.98	5.00	DV50	H8	DV45	H8	DV28	H8	DVF50	1+U10	DVF45	1+U10			
Carry	5.99		DV40	H8	DV40	H8			DVF40	1+U10	DVF40	1+U10			
TALBOT															
150	75		DV40	H8	DV40	H8	DV40	H8	DVF40	1+U10	DVF40	1+U10	DVF40	1+U10	
1100	75		DV28	H8	DV28	H8			DVF35	1+U10	DVF35	1+U10			
1100-1200	75		DV28	H8	DV28	H8			DVF35	1+U10	DVF35	1+U10			

● = *montar con KIT 133 - mount with KIT 133 - monter avec le KIT 133 - mit KIT 133 montieren - montare con KIT 133 - montar com KIT 133*
■ = *montar con KIT 136 - mount with KIT 136 - monter avec le KIT 136 - mit KIT 136 montieren - montare con KIT 136 - montar com KIT 136*

1307-1309	75		DV40	H8	DV40	H8	DV40	H8	DVF40	1+U10	DVF40	1+U10	DVF40	1+U10	
1510	79		DV40	H8	DV40	H8			DVF40	1+U10	DVF40	1+U10			
Horizon	78		DV40	H8	DV40	H8	DV40	H8	DVF40	1+U10	DVF40	1+U10	DVF40	1+U10	
Murena	80		DV50	H8	DV50	H8			DVF50	1+U10	DVF50	1+U10			
Rancho	77		DV28	H8	DV28	H8			DVF35	1+U10	DVF35	1+U10			
Samba	81		DV40	H8	DV40	H8			DVF40	1+U10	DVF40	1+U10			
Solara	79		DV40	H8	DV40	H8			DVF40	1+U10	DVF40	1+U10			
Tagora	79	82	DV45	H8	DV45	H8			DVF45	1+U10	DVF45	1+U10			
Tagora	82		DV48	H8	DV48	H8			DVF48	1+U10	DVF48	1+U10			
TASSO															
Bingo	04		DV55	H8					DVF55	1+U10					
TATA															
Aria	10.12								DVF65	3	DVF65	3			
Indica	10.98	6.10	DV50	H8	DV50	H8	DV28	H8	DVF50	1+U10	DVF50	1+U10			
Indica Vista	6.10		DV60	H8	DV35	H8	DV28	H8	DVF60	1+U10	DVF38	1+U10			
Indigo SW	1.03		DV60	H8	DV35	H8			DVF60	1+U10	DVF38	1+U10			
Safari	8.98		DV60	H8	DV50	H8	DV28	H8	DVF60	1+U10	DVF50	1+U10	DVF35	1+U10	
TESLA															
Model S	1.13								DVF70	3	DVF45	3			
TOWN LIFE															
Ferrucio	01		DV40	H8					DVF40	1+U10					
Ginevra	01		DV40	H8					DVF40	1+U10					
TOYOTA															
4 Runner	93		DV40	H8	DV40	H8			DVF43	1+U10	DVF43	1+U10			
Auris	10.06	10.12	DV65	H8	DV40	H8			DVF65	1+U10	DVF40	1+U10			
Auris	10.12		DV65	H8	DV35	H8			DVF65	1+U10	DVF35	1+U10			
Auris SW Sports	6.13		DV65	H8	DV35	H8			DVF65	1+U10	DVF35	1+U10			
Avensis	1.98	4.03	DV53	H8	DV45	H8			DVF53	1+U10	DVF45	1+U10			
Avensis	4.03	1.09	DV60	H8	DV40	H8			DVF60	1+U10	DVF40	1+U10			
Avensis	1.09								DVF65	3	DVF40	3			
Avensis Cross Sport	1.09								DVF65	3	DVF40	3			
Avensis Verso	8.01		DV55	H8	DV40	H8			DVF55	1+U10	DVF40	1+U10			
Avensis Wagon	4.03	1.09	DV60	H8	DV40	H8			DVF60	1+U10	DVF40	1+U10			
Aygo	6.05		DV65	H8					DVF65	1+U10					DVR30
Camry	10.92		DV53	H8	DV48	H8			DVF53	1+U10	DVF48	1+U10			
Carina E (5dr)	4.92		DV53	H8	DV45	H8	DV50	H8	DVF53	1+U10	DVF45	1+U10	DVF50	1+U10	
Celica	90	94	DV50	H8	DV45	H8	DV53	H8	DVF50	1+U10	DVF45	1+U10	DVF53	1+U10	
Celica	94	1.00	DV53	H8	DV48	H8	DV50	H8	DVF53	1+U10	DVF48	1+U10	DVF50	1+U10	
Corolla	92	97	DV50	H8	DV45	H8	DV40	H8	DVF50	1+U10	DVF45	1+U10	DVF40	1+U10	
Corolla (3dr)	97	1.02	DV50	H8	DV45	H8	DV40	H8	DVF50	1+U10	DVF45	1+U10	DVF40	1+U10	
Corolla (5dr)	97	1.02	DV50	H8	DV45	H8	DV50	H8	DVF50	1+U10	DVF45	1+U10	DVF50	1+U10	
Corolla (3/5dr)	1.02		DV55	H8	DV45	H8			DVF55	1+U10	DVF45	1+U10			
Corolla Familiar	98	1.02	DV50	H8	DV45	H8	DV28	H8	DVF50	1+U10	DVF45	1+U10	DVF35	1+U10	
Corolla Sedan	5.07		DV65	H8	DV35	H8			DVF35	1+U10	DVF35	1+U10			
Corolla Verso	5.04		DV65	H8	DV40	H8			DVF65	1+U10	DVF40	1+U10			
Corolla Verso	1.02	5.04	DV55	H8	DV40	H8			DVF55	1+U10	DVF40	1+U10			
Corona	75	79							DVF40	1+B6	DVF40	1+B6			
GT-86	3.12		DV55	H8	DV50	H8			DVF55	1+U10	DVF50	1+U10			
Hilux	1.97	2.02	DV45	H8	DV45	H8			DVF45	1+U10	DVF45	1+U10			
Hilux	2.02	8.05	DV40	H8	DV28	H8			DVF40	1+U10	DVF35	1+U10			
Hilux	8.05		DV53	H8	DV48	H8			DVF53	1+U10	DVF48	1+U10			
iQ	4.09		DV55	H8	DV45	H8			DVF55	1+U10	DVF45	1+U10			
Land Cruiser	90	96	DV45	H8	DV45	H8	DV28	H8	DVF45	1+U10	DVF45	1+U10	DVF35	1+U10	
Land Cruiser	96	2.03	DV48	H8	DV48	H8	DV35	H8	DVF48	1+U10	DVF48	1+U10	DVF35	1+U10	
Land Cruiser	2.03	1.08	DV55	H8	DV53	H8	DV45	H8	DVF55	1+U10	DVF53	1+U10	DVF45	1+U10	
Land Cruiser	1.08		DV65	H8	DV50	H8			DVF65	1+U10	DVF50	1+U10			
Land Cruiser 100	1.98		DV60	H8	DV55	H8	DV40	H8	DVF60	1+U10	DVF55	1+U10	DVF40	1+U10	
Land Cruiser 200	2.08		DV60	H8	DV55	H8			DVF60	1+U10	DVF55	1+U10			
MR2	5.00		DV60	H8	DV48	H8			DVF60	1+U10	DVF48	1+U10			
Paseo	9.96		DV50	H8	DV45	H8			DVF50	1+U10	DVF45	1+U10			
Picnic	2.99		DV60	H8	DV35	H8	DV40	H8	DVF60	1+U10	DVF35	1+U10	DVF40	1+U10	
Prius II	8.03	3.09	DV65	H8	DV40	H8	DV40	H8	DVF65	1+U10	DVF40	1+U10	DVF40	1+U10	
Prius III	3.09		DV65	H8	DV40	H8	DV40	H8	DVF65	1+U10	DVF40	1+U10	DVF40	1+U10	
Prius+	3.12		DV65	H8	DV45	H8			DVF65	1+U10	DVF45	1+U10			
Rav-4	6.94	00	DV50	H8	DV45	H8	DV35	H8	DVF50	1+U10	DVF45	1+U10	DVF35	1+U10	
Rav-4	00	11.05	DV60	H8	DV48	H8			DVF60	1+U10	DVF48	1+U10			
Rav-4	11.05	5.13	DV60	H8	DV40	H8			DVF60	1+U10	DVF40	1+U10			
Rav-4	5.13		DV65	H8	DV40	H8			DVF65	1+U10	DVF40	1+U10			
Starlet	96		DV50	H8	DV45	H8	DV40	H8	DVF50	1+U10	DVF45	1+U10	DVF40	1+U10	

● = *montar con KIT 133 - mount with KIT 133 - monter avec le KIT 133 - mit KIT 133 montieren - montare con KIT 133 - montar com KIT 133*
■ = *montar con KIT 136 - mount with KIT 136 - monter avec le KIT 136 - mit KIT 136 montieren - montare con KIT 136 - montar com KIT 136*

			DURAVISION						DURAVISION FLEX						DURAVISION rear
Urban Cruiser	4.09		DV60	H8	DV35	H8			DVF60	1+U10	DVF35	1+U10			
Verso	4.09		DV65	H8	DV40	H8			DVF65	1+U10	DVF40	1+U10			
Verso S	11.10		DV70	H8					DVF70	1+U10					
Yaris	4.99	1.06	DV53	H8	DV35	H8			DVF53	1+U10	DVF35	1+U10			DVR30
Yaris	1.06	9.11	DV60	H8	DV35	H8			DVF60	1+U10	DVF35	1+U10			
Yaris	9.11		DV70	H8					DVF70	1+U10					
VAUXHALL (UK)															
Adam	10.12								DVF65	3	DVF40	3			
Agila	4.00	9.07	DV50	H8	DV45	H8	DV28	H8	DVF50	1+U10	DVF45	1+U10	DVF35	1+U10	
Agila	9.07		DV55	H8	DV40	H8			DVF55	1+U10	DVF40	1+U10			
Ampera	11.11								DVF65	3	DVF65	3			
Antara	5.06		DV60	H8	DV40	H8			DVF60	1+U10	DVF40	1+U10			
Astra	91	97	DV45	H8	DV45	H8	DV45	H8	DVF45	1+U10	DVF45	1+U10	DVF45	1+U10	
Astra (3/5dr)	97	4.04	DV50	H8	DV48	H8			DVF50	1+U10	DVF48	1+U10			DVR40
Astra (5dr)	4.04	12.09							DVF55	2	DVF45	2			
Astra (5dr)	12.09								DVF65	3	DVF60	3			
Astra Coupe	10.00	3.05	DV50	H8	DV48	H8			DVF50	1+U10	DVF48	1+U10			
Astra Estate	92	5.98	DV45	H8	DV45	H8	DV45	H8	DVF45	1+U10	DVF45	1+U10	DVF45	1+U10	
Astra Estate	5.98	10.04	DV50	H8	DV48	H8			DVF50	1+U10	DVF48	1+U10			DVR40
Astra Estate	10.04	10.10							DVF55	2	DVF45	2			
Astra GTC	3.05	10.11							DVF55	2	DVF45	2			
Astra GTC	10.11								DVF70	3	DVF60	3			
Astra Saloon	9.98	2.07	DV50	H8	DV48	H8			DVF50	1+U10	DVF48	1+U10			
Astra Saloon	2.07	6.12							DVF55	2	DVF45	2			
Astra Sports Tourer	10.10								DVF65	3	DVF60	3			
Astra TwinTop	5.06								DVF55	2	DVF45	2			
Calibra	90		DV48	H8	DV48	H8	DV48	H8	DVF48	1+U10	DVF48	1+U10	DVF48	1+U10	
Cascada	3.13								DVF65	3	DVF60	3			
Combo	3.02		DV50	H8	DV40	H8	DV35	H8	DVF50	1+U10	DVF40	1+U10	DVF35	1+U10	DVR40
Corsa (3dr)	12.96	9.00	DV45	H8	DV45	H8	DV40	H8	DVF45	1+U10	DVF45	1+U10	DVF40	1+U10	
Corsa (5dr)	12.96	9.00	DV45	H8	DV45	H8	DV35	H8	DVF45	1+U10	DVF45	1+U10	DVF35	1+U10	
Corsa	10.00	7.06	DV50	H8	DV45	H8			DVF50	1+U10	DVF45	1+U10			DVR40
Corsa	7.06								DVF65	4	DVF40	4			
Frontera	11.98		DV48	H8	DV48	H8	DV28	H8	DVF48	1+U10	DVF48	1+U10	DVF35	1+U10	
GT	6.07		DV40	H8	DV55	H8			DVF40	1+U10	DVF55	1+U10			
Insignia	7.08		DV60	H8	DV45	H8			DVF60	1+U10	DVF45	1+U10			
Insignia Sports Tourer	7.08		DV60	H8	DV45	H8			DVF60	1+U10	DVF45	1+U10			
Meriva	4.03	6.10	DV60	H8	DV60	H8			DVF60	1+U10	DVF60	1+U10			
Meriva	6.10								DVF65	3	DVF58	3			DVR40
Mokka	6.12								DVF65	3	DVF35	3			
Monterey	93		DV50	H8	DV50	H8	DV40	H8	DVF50	1+U10	DVF50	1+U10	DVF40	1+U10	
Omega	95		DV60	H8	DV48	H8	DV40	H8	DVF60	1+U10	DVF48	1+U10	DVF40	1+U10	
Omega Sport Wagon	97		DV60	H8	DV48	H8	DV35	H8	DVF60	1+U10	DVF48	1+U10	DVF35	1+U10	
Signum	4.03		DV60	H8	DV48	H8			DVF60	1+U10	DVF48	1+U10			
Sintra	97		DV60	H8	DV60	H8	DV40	H8	DVF60	1+U10	DVF60	1+U10	DVF40	1+U10	
Tigra	95	9.04	DV45	H8	DV45	H8	DV50	H8	DVF45	1+U10	DVF45	1+U10	DVF50	1+U10	
Tigra Twin Top	9.04		DV50	H8	DV45	H8			DVF50	1+U10	DVF45	1+U10			
Vectra	12.96	4.02	DV48	H8	DV48	H8	DV48	H8	DVF48	1+U10	DVF48	1+U10	DVF48	1+U10	
Vectra	4.02		DV60	H8	DV48	H8			DVF60	1+U10	DVF48	1+U10			DVR40
Vectra Estate	97	11.03	DV48	H8	DV48	H8	DV28	H8	DVF48	1+U10	DVF48	1+U10	DVF35	1+U10	
Vectra Estate	11.03		DV60	H8	DV48	H8			DVF60	1+U10	DVF48	1+U10			
Vivaro	8.01		DV60	H8	DV53	H8			DVF60	1+U10	DVF53	1+U10			DVR40
Zafira	4.99	9.05	DV60	H8	DV60	H8			DVF60	1+U10	DVF60	1+U10			DVR40
Zafira	9.05	10.11							DVF70	4	DVF55	4			DVR35
Zafira	10.11								DVF70	3	DVF70	3			
Movano	4.10		DV65	H8	DV65	H8			DVF65	1+U10	DVF65	1+U10			
VOLKSWAGEN															
411-412	68		DV40	H8	DV40	H8			DVF40	1+U10	DVF40	1+U10			
Amarok	9.10	5.12	DV60	H8	DV55	H8			DVF60	1+U10	DVF55	1+U10			
Bora	1.99	6.02	DV53	H8	DV48	H8			DVF53	1+U10	DVF48	1+U10			
Bora	6.02								DVF53	2	DVF48	2			
Beetle	4.11								DVF53	6	DVF53	6			
Corrado	89	92	DV48	H8	DV48	H8	DV45	H8	DVF48	1+U10	DVF48	1+U10	DVF45	1+U10	
Corrado	93		DV48	H8	DV48	H8	DV48	H8	DVF48	1+U10	DVF48	1+U10	DVF48	1+U10	
Derby	77		DV40	H8	DV40	H8			DVF40	1+U10	DVF40	1+U10			
Eos	4.06								DVF60	3	DVF48	3			
Fox	6.05		DV55	H8	DV35	H8			DVF55	1+U10	DVF38	1+U10			

● = *montar con KIT 133 - mount with KIT 133 - monter avec le KIT 133 - mit KIT 133 montieren - montare con KIT 133 - montar com KIT 133*
■ = *montar con KIT 136 - mount with KIT 136 - monter avec le KIT 136 - mit KIT 136 montieren - montare con KIT 136 - montar com KIT 136*

			DURAVISION						DURAVISION FLEX						DURAVISION rear
Golf I	74	83	DV40	H8	DV40	H8	DV40	H8	DVF40	1+U10	DVF40	1+U10	DVF40	1+U10	
Golf III	11.91	8.97	DV53	H8	DV48	H8	DV28	H8	DVF53	1+U10	DVF48	1+U10	DVF35	1+U10	
Golf III Variant	7.93	4.99	DV53	H8	DV48	H8	DV35	H8	DVF53	1+U10	DVF48	1+U10	DVF38	1+U10	
Golf IV	8.97	02	DV53	H8	DV48	H8	DV28	H8	DVF53	1+U10	DVF48	1+U10	DVF35	1+U10	
Golf IV	02	11.03							DVF53	2	DVF48	2			
Golf IV Variant	5.99	02	DV53	H8	DV48	H8	DV35	H8	DVF53	1+U10	DVF48	1+U10	DVF38	1+U10	
Golf IV Variant	02	6.07							DVF53	2	DVF48	2			
Golf Plus	1.05								DVF70	2	DVF70	2			
Golf V	11.03	11.05							DVF60	2	DVF48	2			
Golf V	11.05	10.08							DVF60	3	DVF48	3			
Golf V Variant	6.07	7.09							DVF60	3	DVF48	3			
Golf VI	10.08	11.12							DVF60	3	DVF48	3			
Golf VI Variant	7.09	3.13							DVF60	3	DVF48	3			
Golf VII	8.12								DVF65	6	DVF45	6			
Golf Sportsvan	2.14								DVF70	6	DVF40	6			
Jetta	79	88	DV40	H8	DV40	H8			DVF40	1+U10	DVF40	1+U10			
Jetta	89	10.05	DV45	H8	DV45	H8			DVF45	1+U10	DVF45	1+U10			
Jetta	10.05	6.10							DVF60	2	DVF48	2			
Jetta	2.11								DVF60	6	DVF48	6			
Lupo	11.98	02	DV53	H8	DV48	H8			DVF53	1+U10	DVF48	1+U10			
Lupo	5.01								DVF50	2	DVF45	2			
Multivan	6.03	11.09							DVF60	2	DVF60	2			
Multivan	11.09		DV60	H8	DV60	H8			DVF60	1+U10	DVF60	1+U10			
Multivan T5	6.13								DVF60	6	DVF60	6			
New Beetle Cabrio	4.03		DV53	H8	DV53	H8			DVF53	1+U10	DVF53	1+U10			
New Beetle	5.99	10.11	DV53	H8	DV53	H8			DVF53	1+U10	DVF53	1+U10			
Passat CC	6.08	11.11							DVF60	3	DVF45	3			
Passat I	73	80	DV40	H8	DV40	H8	DV40	H8	DVF40	1+U10	DVF40	1+U10	DVF40	1+U10	
Passat II	80	88	DV45	H8	DV45	H8	DV40	H8	DVF45	1+U10	DVF45	1+U10	DVF40	1+U10	
Passat III	88	92	DV53	H8	DV53	H8			DVF53	1+U10	DVF53	1+U10			
Passat IV	93	96	DV53	H8	DV53	H8			DVF53	1+U10	DVF53	1+U10			
Passat V	97	1.01	DV53	H8	DV53	H8			DVF53	1+U10	DVF53	1+U10			
Passat V	1.01	3.05							DVF53	2	DVF50	2			
Passat VI	3.05	8.10							DVF60	3	DVF48	3			
Passat VII	8.10	7.11							DVF60	3	DVF48	3			
Passat Variant	97	1.01	DV53	H8	DV53	H8	DV35	H8	DVF53	1+U10	DVF53	1+U10	DVF38	1+U10	
Passat Variant V	1.01	10.05							DVF53	2	DVF50	2			
Passat Variant VI	10.05	8.10							DVF60	3	DVF48	3			
Passat Variant VII	8.10	7.11							DVF60	3	DVF48	3			
Phaeton	11.02								DVF60	2	DVF53	2			
Polo II	95	10.01	DV48	H8	DV48	H8			DVF48	1+U10	DVF48	1+U10			
Polo III	10.01	1.06							DVF53	2	DVF45	2			
Polo III	1.06	6.09							DVF53	3	DVF48	3			
Polo IV	6.09								DVF60	6	DVF40	6			
Santana	81		DV45	H8	DV45	H8			DVF45	1+U10	DVF45	1+U10			
Scirocco	74	81	DV40	H8	DV40	H8	DV40	H8	DVF40	1+U10	DVF40	1+U10	DVF40	1+U10	
Scirocco	81	9.08	DV48	H8	DV48	H8	DV40	H8	DVF48	1+U10	DVF48	1+U10	DVF40	1+U10	
Scirocco	9.08								DVF60	3	DVF48	3			
Sharan	95	01	DV70	H12	DV70	H12	DV40	H8							
Sharan	01	5.10							DVF70	2	DVF70	2			
Sharan	5.10								DVF70	6	DVF40	6			
Tiguan	9.07								DVF60	3	DVF53	3			
Touareg	2.03	1.10							DVF65	2	DVF65	2			
Touareg	1.10								DVF60	2	DVF60	2			
Touran	4.03	5.10							DVF70	2	DVF70	2			
Touran	6.09								DVF60	3	DVF45	3			
Vento	4.92		DV53	H8	DV48	H8			DVF53	1+U10	DVF48	1+U10			
Caddy	11.06								DVF60	3	DVF45	3			
Caddy	11.95	3.04	DV50	H8	DV45	H8			DVF50	1+U10	DVF45	1+U10			
Caddy	3.04	11.06							DVF60	2	DVF45	2			
California	95	7.03	DV53	H8	DV53	H8	DV40	H8	DVF53	1+U10	DVF53	1+U10	DVF40	1+U10	
Caravelle	95	7.03	DV53	H8	DV53	H8	DV40	H8	DVF53	1+U10	DVF53	1+U10	DVF40	1+U10	
LT	11.82	4.96	DV48	H8	DV48	H8			DVF48	1+U10	DVF48	1+U10			
LT	4.96		DV60	H8	DV55	H8			DVF60	1+U10	DVF55	1+U10			
Transporter	95	7.03	DV53	H8	DV53	H8	DV40	H8	DVF53	1+U10	DVF53	1+U10	DVF40	1+U10	
Transporter	7.03		DV60	H8	DV60	H8			DVF60	1+U10	DVF60	1+U10			
Transporter Shuttle	12.03								DVF60	2	DVF60	2			
VOLVO															
242, 244, 262, 264, 265	74								DVF40	1+B6	DVF40	1+B6			

● = *montar con KIT 133 - mount with KIT 133 - monter avec le KIT 133 - mit KIT 133 montieren - montare con KIT 133 - montar com KIT 133*
■ = *montar con KIT 136 - mount with KIT 136 - monter avec le KIT 136 - mit KIT 136 montieren - montare con KIT 136 - montar com KIT 136*

			DURAVISION						DURAVISION FLEX						DURAVISION rear
240, 245	83		DV40	H8	DV40	H8			DVF40	1+U10	DVF40	1+U10			
340, 343, 345, 360	82		DV45	H8	DV45	H8			DVF45	1+U10	DVF45	1+U10			
440-460	89		DV53	H8	DV53	H8			DVF53	1+U10	DVF53	1+U10			
480 ES	86		DV50	H8	DV50	H8			DVF50	1+U10	DVF50	1+U10			
740, 760	83	88	DV45	H8	DV45	H8			DVF45	1+U10	DVF45	1+U10			
740, 760	89	93	DV50	H8	DV50	H8			DVF50	1+U10	DVF50	1+U10			
760	82		DV45	H8	DV45	H8			DVF45	1+U10	DVF45	1+U10			
850	10.93	96	DV53	H8	DV50	H8			DVF53	1+U10	DVF50	1+U10			
850 SW	10.93	96	DV53	H8	DV50	H8	DV40	H8	DVF53	1+U10	DVF50	1+U10	DVF40	1+U10	
940	91		DV50	H8	DV50	H8			DVF50	1+U10	DVF50	1+U10			
C 30	10.06								DVF65	3	DVF50	3			
C 70	9.97	1.06	DV53	H8	DV53	H8			DVF53	1+U10	DVF53	1+U10			
C 70	1.06								DVF65	3	DVF48	3			
S 40	96	2.04	DV53	H8	DV50	H8			DVF53	1+U10	DVF50	1+U10			
S 40	2.04	1.06							DVF65	2	DVF50	2			
S 40	1.06								DVF65	3	DVF50	3			
S 60	3.00	8.04	DV60	H8	DV53	H8			DVF60	1+U10	DVF53	1+U10			
S 60	8.04	4.10							DVF60	4	DVF55	4			
S 60	4.10								DVF65	3	DVF50	3			
S 70	96		DV53	H8	DV53	H8			DVF53	1+U10	DVF53	1+U10			
S 80	10.98	4.03	DV60	H8	DV53	H8			DVF60	1+U10	DVF53	1+U10			
S 80	4.03	3.06							DVF60	4	DVF55	4			
S 80	3.06								DVF65	3	DVF50	3			
S 90	96		DV53	H8	DV53	H8			DVF53	1+U10	DVF53	1+U10			
V 40	96	3.12	DV53	H8	DV50	H8	DV40	H8	DVF53	1+U10	DVF50	1+U10	DVF40	1+U10	
V 40	3.12								DVF65	3	DVF48	3			
V 50	5.04	1.06							DVF65	2	DVF50	2			
V 50	1.06								DVF65	3	DVF50	3			
V 60	9.10								DVF65	3	DVF50	3			
V 70	96	3.00	DV53	H8	DV53	H8	DV40	H8	DVF53	1+U10	DVF53	1+U10	DVF40	1+U10	
V 70	3.00	8.04	DV60	H8	DV53	H8			DVF60	1+U10	DVF53	1+U10			
V 70	8.04	8.07							DVF60	4	DVF55	4			
V 70	8.07								DVF65	3	DVF50	3			
V 90	96		DV53	H8	DV53	H8	DV35	H8	DVF53	1+U10	DVF53	1+U10	DVF35	1+U10	
XC 60	5.08								DVF65	3	DVF50	3			
XC 70	9.00	8.04	DV60	H8	DV53	H8			DVF60	1+U10	DVF53	1+U10			
XC 70	8.04	8.07							DVF60	4	DVF55	4			
XC 90	10.02	8.04	DV60	H8	DV55	H8			DVF60	1+U10	DVF55	1+U10			
XC 90	8.04								DVF60	4	DVF55	4			

● = *montar con KIT 133 - mount with KIT 133 - monter avec le KIT 133 - mit KIT 133 montieren - montare con KIT 133 - montar com KIT 133*
■ = *montar con KIT 136 - mount with KIT 136 - monter avec le KIT 136 - mit KIT 136 montieren - montare con KIT 136 - montar com KIT 136*

DURAVISION

280 mm 11" DV28

AUSTIN					
Metro	85				●
BMW					
Serie 3 Touring (E36)	95	00			●
CADILLAC					
SRX	10.04	1.09			●
CHATENET					
Stella	4				●
CHEVROLET					
Aveo (3/5dr)	4.08	3.11			●
CITROËN					
LN / LNA	76		●	●	●
DAIHATSU					
Terios	4.97	7.06		●	●
DODGE					
Caliber	6.06				●
FIAT					
Uno	83				●
FORD					
Fiesta	76	89	●	●	
Mondeo Wagon	3.93	11.00			●
Tourneo Connect	6.02	13			●
GALLOPER					
Exceed	5.98				●
HONDA					
CR-V (I)	11.97	4.02			●
CR-V (II)	4.02	11.06			●
CR-V (IV)	10.12				●
HYUNDAI					
Santa Fe	2.01	3.06			●
JAGUAR					
XJ-S Convertible	86		●	●	
JEEP					
Cherokee	4.97	4.00			●
Wrangler	11.96	4.07	●	●	
KIA					
Carens	8.99	7.02			●
LAND ROVER					
Defender	90		●	●	●
MAZDA					
323 F (5dr/Sedan)	98				●
626 SW	2.98				●
Tribute	3.00				●
MITSUBISHI					
Colt	4.04			●	
Colt CZC	4.06			●	
Space Gear	5.95				●
Space Star	6.98	12.04			●
NISSAN					
Almera	10.95	3.00			●
Almera (3/5dr)	3.00				●
Pathfinder	1.99	3.05			●
Patrol	89				●
Patrol GR	5.98				●
Patrol GR	2.93	5.98			●
Sunny	85	89			●
OPEL					
Agila	4.00	9.07			●
Corsa	82	12.96			●
Frontera	92				●
Omega	87	94			●
Vectra Caravan	97	11.03			●
RENAULT					
Alpine 1600	75	78	●	●	
SEAT					
Ibiza III	5.99	3.02			●
Marbella	83				●
Panda	10.80	9.03			●
SKODA					
Octavia Combi	7.98	1.05			●
SSANGYONG					
Musso	95	97			●
Rodius	5.05	6.13			●
SUZUKI					
Alto	96	12.08			●
Baleno SW	95				●
Ignis	10.00				●
Jimny	11.98				●
Liana	7.01				●
Vitara JHT	90				●
Wagon R+	6.98				●
TATA					
Indica	10.98	6.10			●
Indica Vista	6.10				●
Safari	8.98				●
TOYOTA					
Corolla Familiar	98	1.02			●
Hilux	2.02	8.05		●	
Land Cruiser	90	96			●
VAUXHALL (UK)					
Agila	4.00	9.07			●
Frontera	11.98				●
Vectra Estate	97	11.03			●
VOLKSWAGEN					
Golf III	11.91	8.97			●
Golf IV	8.97	02			●
DAIHATSU					
Hijet	95			●	

350 mm 14" DV35

CHEVROLET					
Matiz	4.05			●	
Spark	3.10			●	
DAEWOO					
Matiz	9.98				●
FIAT					
Sedici	6.06			●	
FORD					
Ka	10.08			●	
GALLOPER					
Super Exceed	8.98				●
HONDA					
Accord (4dr)	3.03	2.06		●	
Accord	2.06	7.08		●	
Accord Tourer	3.03	7.08		●	
Civic (3/5dr)	9.01	1.06		●	
Jazz	4.02			●	
Stream	6.01			●	
HYUNDAI					
Atos	2.98				●
Getz	11.02			●	●
i30	11.11			●	
i30 CW	6.12			●	
i40	3.12			●	
i40 CW	7.11			●	
Lantra SW	9.98				●
Matrix	6.01				●
Santa Fe	9.12			●	
ISUZU					
Trooper	4.00				●
JEEP					
Wrangler	4.07		●	●	
Wrangler Limited	4.07		●	●	
KIA					
Carens	7.02	9.06			●
Pride	10.96				●
Sorento	7.02	11.09			●
LAND ROVER					
Discovery	90	12.97			●
MAZDA					
2	10.07			●	
Premacy	7.99				●
MERCEDES BENZ					
A Class (W168)	7.97	10.04			●
G Class (W463)	8.93				●
MITSUBISHI					
Colt	95	4.04			●
Space Star	1.13			●	
NISSAN					
Juke	6.10			●	
Micra	5.10			●	
Note	3.06	9.13		●	
Pixo	6.09			●	
X-Trail	7.01	6.07		●	
OPEL					
Combo	10.01				●
Corsa (5dr)	12.96	9.00			●
Omega Sport Wagon	97				●
PORSCHE					
911	93	9.97	●	●	
RENAULT					
Kangoo (5dr)	11.97	2.08			●
SEAT					
Ibiza II	92	4.99			●

● = *montar con KIT 133 - mount with KIT 133 - monter avec le KIT 133 - mit KIT 133 montieren - montare con KIT 133 - montar com KIT 133*
■ = *montar con KIT 136 - mount with KIT 136 - monter avec le KIT 136 - mit KIT 136 montieren - montare con KIT 136 - montar com KIT 136*

Ibiza IV	3.02	1.06			●
SSANGYONG					
Kyron	5.05				●
Musso	98				●
Rexton	7.02				●
SUBARU					
Impreza SW	12.00				●
Legacy	91	94			●
Legacy SW	12.98	8.03			●
Outback	3.99	8.03			●
R1	11.06			●	
SUZUKI					
Alto	1.09			●	
Baleno	95				●
Grand Vitara	11.98	9.05			●
SX4	6.06			●	
Vitara V	90				●
TATA					
Indica Vista	6.10			●	
Indigo SW	1.03			●	
TOYOTA					
Auris	10.12			●	
Auris SW Sports	6.13			●	
Corolla Sedan	5.07			●	
Land Cruiser	96	2.03			●
Picnic	2.99			●	
Rav-4	6.94	00			●
Urban Cruiser	4.09			●	
Yaris	4.99	9.11		●	
VAUXHALL (UK)					
Combo	3.02				●
Corsa (5dr)	12.96	9.00			●
Omega Sport Wagon	97				●
VOLKSWAGEN					
Fox	6.05			●	
Golf III Variant	7.93	4.99			●
Golf IV Variant	5.99	02			●
Passat Variant	97	1.01			●
VOLVO					
V 90	96				●
CITROËN					
Berlingo van	9.96	4.08			●
MERCEDES BENZ					
Viano (W639)	9.03	2.05			●

400 mm 16" DV40

ALFA ROMEO					
33	84	92			●
33 Sport Wagon	83				●
Alfasud Sprint	83		●	●	
Alfetta	81		●	●	
Giulietta	77	85	●	●	
GTV	74	87	●	●	
Spider	71	4.95	●	●	
AUDI					
50	74		●	●	
80	83				●
A 3	9.96	5.03			●
A 4	97	11.00			●
A 4 Avant	97	01			●
A 6 Avant	12.97	8.01			●
RS 2 Avant	5.95				●

AUSTIN					
Metro	85		●	●	
CADILLAC					
Escalade	10.06				●
CHEVROLET					
Alero	3.99			●	
Aveo (3/5dr)	4.08	3.11		●	
Aveo (4dr)	1.06	3.11		●	
Blazer trail	9.01				●
Captiva	7.06			●	
Tahoe	12.99				●
Trail Blazer	9.01				●
CITROËN					
AX	86				●
CX	74				●
Evasión	95				●
GS / GSA / GSX	75		●	●	●
Saxo	4.96				●
Xantia II Familiar	9.97				●
DACIA					
Dokker	11.12			●	
Lodgy	3.12			●	
DAEWOO					
Kalos	11.02			●	
Matiz	9.98			●	
Nubira Wagon	5.97	11.04			●
Tacuma	10.00				●
DAIHATSU					
Charade	93				●
DODGE					
Caliber	6.06			●	
Viper	7.97	1.03	●	●	
FERRARI					
California	7.08			●	
FF	6.11			●	
FIAT					
Idea	1.04			●	
Marea	1.97			●	
Panda	9.03	2.12		●	
Punto	94	11.99		●	
Regata	84		●	●	
Tipo	88	92			●
Ulysse	95	11.02			●
FORD					
Escort Guia Nomade	90				●
Fiesta	76	96			●
Fiesta (3/5dr)	11.01	10.08		●	
Focus	11.98	11.04			●
Fusion	11.02			●	
Galaxy	95	01			●
Granada	72				●
Ranger	4.11			●	
GALLOPER					
Exceed	5.98		●	●	
Santamo	11.98				●
HONDA					
Civic	86	88	●	●	
Civic (3dr)	1.95	9.01			●
CR-V (III)	1.07	10.12		●	
CR-V (IV)	10.12			●	
HRV	3.99			●	
Insight	4.09			●	
Logo	3.99			●	
Quintet	81		●	●	
S2000	10.99		●		
HYUNDAI					
Accent	7.06			●	

Atos	2.98			●	
H-1	10.97				●
i10	1.08			●	
i20	9.08			●	
ix35	1.10			●	
Matrix	6.01			●	
Terracan	2.02				●
Trajet	3.00				●
Tucson	11.04			●	
INFINITI					
G37 Cabrio	9.10			●	
G37 Coupe	10.08			●	
G37 Sedán	10.08			●	
ISUZU					
Trooper	10.87	12.91			●
KIA					
Carens	9.06	4.13		●	
Cerato	6.04			●	
Optima	3.12			●	
Picanto	4.04			●	
Rio	3.05			●	
Rio (5dr)	7.05			●	
Sportage	95	9.04			●
Sportage	9.04	7.10		●	
LADA					
Kalina (1118)	10.04			●	
Kalina (1119)	10.04			●	
LANCIA					
Musa	10.04			●	
Ypsilon	2.96	5.11		●	
Z	4.95				●
LAND ROVER					
Discovery	10.04				●
Range Rover Sport	6.05	8.13			●
LEXUS					
LS	4.06			●	
MASERATI					
Gran Cabrio	6.10			●	
Gran Turismo	8.08			●	
Quattroporte	3.04			●	
MAZDA					
2	4.03	9.07		●	
5	2.05			●	
6 (4/5 dr)	8.07	1.13		●	
6 SW	8.07	1.13		●	
323	93	98			●
CX-7	10.07			●	
Demio	8.98			●	
MPV	6.97			●	
Premacy	7.99			●	
MERCEDES BENZ					
E Class SW (S210)	96	3.03			●
G Class (W460)	80	8.93	●	●	●
G Class (W463)	8.93		●	●	
M Class (W163)	3.98	6.05			●
Vaneo	11.01	04			●
MITSUBISHI					
Colt	95	4.04		●	
Galant Wagon	93				●
Lancer	1.08			●	
Lancer Sportback	6.08			●	
Montero / Pajero	86	90	●	●	
Montero / Pajero	9.97	2.07			●
Montero IO	10.99				●
Montero Sport	11.98				●
Space Runner	95				●
NISSAN					
Almera (3/5dr)	3.00			●	

● = *montar con KIT 133 - mount with KIT 133 - monter avec le KIT 133 - mit KIT 133 montieren - montare con KIT 133 - montar com KIT 133*
■ = *montar con KIT 136 - mount with KIT 136 - monter avec le KIT 136 - mit KIT 136 montieren - montare con KIT 136 - montar com KIT 136*

Almera (4dr)	7.00			●	
Leaf	11.10			●	
Máxima	95			●	
Micra	5.98	2.03			●
Murano	10.08			●	
Note	9.13			●	
NV200	2.10			●	
Patrol	79	86	●	●	
Prairie	85		●	●	●
Primastar	9.02				●
Primera Sport Wagon	98	4.02			●
Serena	10.92				●
X-Trail	7.01	6.07			●
X-Trail	6.07			●	
OPEL					
Agila	9.07			●	
Antara	5.06			●	
Combo	10.01			●	
Corsa (3dr)	12.96	9.00			●
GT	9.68	8.73	●	●	
GT	6.07		●		
Kadett	79	84	●	●	●
Kadett	85				●
Monterey	93				●
Omega	95				●
Sintra	97				●
PEUGEOT					
106	91				●
205	83				●
206	10.98			●	
206 CC	01			●	
206+	1.09			●	
305	78		●	●	
504	81		●	●	
806	95				●
Partner	9.96	4.08			●
PORSCHE					
911	93	9.97			●
RENAULT					
Alpine A110	71		●	●	
Clio I	95	4.98			●
Latitude	2.11			●	
R 5	85				●
R 9	81		●	●	
R 11	83		●	●	
R 14	76		●	●	●
R 18	78		●	●	
R 18 Break	78		●	●	●
ROVER					
Serie 100	93		●	●	●
SAAB					
900	78	94	●	●	
SANTANA					
Anibal	10.02		●		
SEAT					
Alhambra	95	01			●
Málaga	85	88	●	●	
Marbella	83		●		
Panda	10.80	9.03	●		
Ritmo	84		●	●	●
Ronda	84		●	●	●
SKODA					
Favorit	90				●
Felicia	4.95				●
Forman	91				●
SSANGYONG					
Korando	11.10			●	
SUBARU					
Forester	8.97	1.08			●

Impreza	12.00			●	
Impreza SW	93	12.00			●
Impreza SW	12.00			●	
Justy	89			●	●
Justy	1.07			●	
Legacy	95	10.98			●
XV	3.12			●	
SUZUKI					
Alto	96	12.08		●	
Jimny	11.98			●	
Splash	1.08			●	
Swift	89	4.05			●
Swift	10.10			●	
TALBOT					
Horizon	78		●	●	●
Samba	81		●	●	
Solara	79		●	●	
TOWN LIFE					
Ferrucio			●		
Ginevra			●		
TOYOTA					
4 Runner	93		●	●	
Auris	10.06	10.12		●	
Avensis	4.03	1.09		●	
Avensis Verso	8.01			●	
Avensis Wagon	4.03	1.09		●	
Corolla	92	97			●
Corolla (3dr)	97	1.02			●
Corolla Verso	1.02			●	
Hilux	2.02	8.05	●		
Land Cruiser 100	1.98				●
Picnic	2.99				●
Prius II	8.03	3.09		●	●
Prius III	3.09			●	●
Rav-4	11.05			●	
Starlet	96				●
Verso	4.09			●	
VAUXHALL (UK)					
Sintra	97				●
Corsa (3dr)	12.96	9.00			●
Omega	95				●
Monterey	93				●
GT	6.07		●		
Agila	9.07			●	
Antara	5.06			●	
Combo	3.02			●	
VOLKSWAGEN					
Derby	77		●	●	
Golf I	74	83	●	●	●
Golf II	84	10.91			●
Jetta	79	88	●	●	
Passat II	80	88			●
Scirocco	81	9.08			●
Sharan	95	01			●
VOLVO					
240, 245	83		●	●	
850 SW	10.93	96			●
V 40	96	3.12			●
V 70	96	3.00			●
CHEVROLET					
Trans Sport	2.98				●
CHRYSLER					
Grand Voyager	1.96	10.07			●
PT Cruiser	6.00				●
Voyager	1.96				●
CITROËN					
Berlingo	9.96	4.08			●

DAIHATSU					
Hijet	95		●		
NISSAN					
Vanette Cargo	1.95				●
PEUGEOT					
Expert	95	1.07			●
PIAGGIO					
Porter	95		●	●	
SEAT					
Terra	12.86		●		
Trans	82	12.86	●		
SUZUKI					
Carry	5.99		●	●	
VOLKSWAGEN					
California	95	7.03			●
Caravelle	95	7.03			●
Transporter	95	7.03			●

450 mm 18" DV45

ALFA ROMEO					
6	79		●	●	
33	84	92	●	●	
33 Sport Wagon	83		●	●	
75	86		●	●	
90	84		●	●	
ASTON MARTIN					
Cignet	4.11			●	
AUDI					
100	82	88			●
A 6 Avant	6.94	12.97			●
Coupe GT	80	83	●	●	●
Quattro	80	83	●	●	●
AUSTIN					
Maestro	84				●
AUTOBIANCHI					
Y 10	85	92	●		
BMW					
Compact (E46)	6.01				●
M 6	84		●	●	
Serie 3 (E21)	79	83	●	●	
Serie 3 Compact (E36)	95	6.01			●
Serie 3 SW (E30)	82	95			●
Serie 5 (E28)	4.79	2.88	●	●	
Serie 6 (E24)	79	93	●	●	
Serie 6 Csi	84		●	●	
Serie 7 (E23)	79	86	●	●	
Serie X5	5.00	2.07			●
CADILLAC					
ATS	2.13			●	
CHEVROLET					
Cruze (4dr)	5.09			●	
Cruze (5dr)	6.11			●	
Cruze SW	8.12			●	
HHR	10.07		●	●	
CHRYSLER					
Le Baron	93		●	●	
Neon	11.94	4.99		●	
Saratoga	93		●	●	
CITROËN					
C2	9.03			●	
C3	5.02	11.09		●	
Pluriel	5.03			●	

● = *montar con KIT 133 - mount with KIT 133 - monter avec le KIT 133 - mit KIT 133 montieren - montare con KIT 133 - montar com KIT 133*
■ = *montar con KIT 136 - mount with KIT 136 - monter avec le KIT 136 - mit KIT 136 montieren - montare con KIT 136 - montar com KIT 136*

Saxo	4.96			●	
XM	90				●
Xsara	9.97				●
ZX	4.91				●
DAEWOO					
Aranos	95		●	●	
Compact	5.97				●
Lacetti	2.04				●
Nexia	95		●	●	●
DAIHATSU					
Charade	93			●	
Terios	7.06			●	
FERRARI					
599 GTB	6.06			●	
612 Scaglietti	4.04			●	
FIAT					
Dobló Cargo	3.01	2.10		●	
Dobló Panorama	3.01	2.10		●	
Duna	1.87		●	●	
Palio Weekend	2.98			●	
Punto	11.99	10.05		●	
Strada	6.99			●	
FORD					
Escort	80		●	●	●
Escort 2 (GB)	75	80	●	●	
Escort Guia Nomade	90		●	●	
Explorer	91		●	●	
Fiesta	89	96	●	●	
Granada	72		●	●	
Ka	10.96	10.08	●	●	
Maverick	93	4.98	●	●	
Mondeo	3.93	11.00			●
Orion	83		●	●	
Ranger	6.99	4.11	●	●	
Scorpio	85		●	●	●
Sierra	82		●	●	●
Taunus	79		●	●	
GALLOPER					
Santamo	11.98			●	
HONDA					
Accord Coupe	2.98			●	
Civic	89	92			●
Civic	93	12.94		●	●
Civic (3dr)	1.95	9.01		●	
Civic (5dr)	1.95	9.01		●	●
Civic	2.12			●	
Concerto	91	96	●	●	●
CRX	92				●
Prelude	89	92	●	●	
Prelude	1.97			●	
HYUNDAI					
Accent	1.95	3.03		●	
Accent	3.03	7.06		●	●
Coupe	96			●	
Elantra	6.00			●	
Lantra	92			●	
Lantra SW	9.98			●	
Pony	90		●	●	
S Coupe	92	96	●	●	
Santa Fe	3.06	9.12		●	
Sonata	92	10.98		●	
Sonata	1.10			●	
Veloster	3.11			●	
INFINITI					
EX	10.08			●	
INNOCENTI					
990	86		●	●	
ISUZU					
Trooper	10.87	12.91	●	●	

JAGUAR					
XJ	79	95	●	●	
JEEP					
Cherokee	4.97	4.00	●	●	
Commander	9.05		●	●	
Wrangler	11.96	4.07			●
KIA					
Carens	7.02	9.06		●	
Carnival	3.99	6.06			●
Carnival	6.06			●	
Magentis	4.06			●	
Opirus	10.03			●	
Pride	10.96		●	●	
Rio	9.00	3.05		●	
Shuma	98				●
Sorento	7.02	11.09		●	
Sportage	7.10			●	
LANCIA					
Delta	85	92	●	●	●
Gamma	85		●	●	
Prisma	85		●	●	
Y 10	85	92	●		
LAND ROVER					
Discovery	90	12.97	●	●	
Range Rover	90	94	●	●	●
LEXUS					
CT	12.10			●	
GS	4.05			●	
IS	6.13			●	
MAZDA					
6	1.13			●	
6 (4/5dr)	6.02	8.07		●	
6 Wagon	11.02	8.07		●	
6 Wagon	1.13			●	
323	86	92	●	●	●
323	93	98		●	
626	86	91	●	●	●
929	86		●	●	
B-2500	6.99		●	●	
CX-5	11.11			●	
MX-3	93			●	
MX-5	93		●	●	
RX-8	7.03			●	
MERCEDES BENZ					
V Class	10.96				●
MG					
ZR	6.01		●	●	●
ZS	6.01			●	
MICROCARS					
Zeus			●		
MINI					
Cabrio	7.04	11.07	●		
Clubman	10.07	4.12	●		
Mini	9.01	9.06	●		
MITSUBISHI					
Galant	90			●	
Galant Wagon	93			●	
L200	11.01	11.05		●	
L200	10.09			●	
Lancer EVO VII	2.01			●	
Montero IO	10.99		●		
Outlander	4.03	11.06		●	
Outlander	8.12			●	
Space Gear	5.95			●	
Space Runner	95			●	
Space Star	6.98	12.04		●	
NISSAN					
350 Z	6.03			●	●

350Z Roadster	6.05			●	
370 Z	6.09			●	●
Almera Tino	8.00			●	
Micra	1.93	4.98		●	●
Micra	5.98	5.10		●	
Patrol	86		●	●	
Patrol GR	2.93	5.98	●	●	
Sunny	89	90			●
Vanette	10.86	1.95	●	●	
OPEL					
Agila	4.00	9.07		●	
Ascona	75		●	●	
Astra	91	97	●	●	●
Astra Caravan	92	5.98	●	●	●
Corsa	82	12.96	●	●	
Corsa (3/5dr)	12.96	9.00	●	●	
Corsa	10.00	7.06		●	
Corsa Combo	95		●	●	
Insignia	7.08			●	
Insignia Sports Tourer	7.08			●	
Kadett	85		●	●	
Monza	77		●	●	
Omega	77	86	●	●	
Senator	77	89	●	●	
Tigra	95	9.04	●	●	
Tigra Twin Top	9.04			●	
Vectra	88	89	●	●	
PEUGEOT					
106	95			●	
106	91	94	●	●	
205	83		●	●	
206 SW	5.02			●	
309	86		●	●	●
505	79		●	●	●
604	75		●	●	
1007	6.05			●	
PORSCHE					
928	77		●	●	
944	75		●	●	●
RENAULT					
Avantime	9.01			●	
Clio I	90	94	●	●	
Clio II	5.98	9.05		●	
Espace III	98	11.02		●●	
Laguna	1.94	01		●	
Mégane	10.02	1.06		●	
Mégane Cabrio	10.03	1.06		●	
Mégane Grand Tour	9.03	1.06		●	
Mégane Sedan	9.03	1.06		●	
R 5	85		●	●	
Twizy	4.12		●		
ROLLS-ROYCE					
Silver Spirit	81		●	●	
Silver Spur	81		●	●	
ROVER					
25	2.00		●	●	●
45	2.00			●	
2400 / 2600	84		●	●	
3500 / Vanden Plas	85		●	●	
Serie 200	85	2.00	●	●	●
Serie 400	93	96	●	●	●
Serie 400	1.97	2.00		●	●
SAAB					
900 Turbo 16 Cabriolet	86	94	●	●	
SANTANA					
Anibal	10.02			●	
SEAT					
Córdoba	1.94	02		●	
Córdoba Vario	99			●	
Ibiza I	89	92			●

● = *montar con KIT 133 - mount with KIT 133 - monter avec le KIT 133 - mit KIT 133 montieren - montare con KIT 133 - montar com KIT 133*
■ = *montar con KIT 136 - mount with KIT 136 - monter avec le KIT 136 - mit KIT 136 montieren - montare con KIT 136 - montar com KIT 136*

Ibiza I	84	88	●		●
Málaga	89		●	●	
SKODA					
Favorit	90	92	●	●	
Forman	91	95	●	●	
SMART					
Forfour	4.04			●	
Roadster Cabrio	4.03			●	
Roadster Coupe	4.03			●	
SSANGYONG					
Korando	96	11.10	●	●	
Musso	98			●	
Musso Sports Pick-up	2.04			●	
Rodius	5.05			●	
SUBARU					
Forester	1.08			●	
Impreza	93	12.00		●	
Impreza SW	93	12.00		●	
Justy	89		●		
Legacy	91	94		●	
Legacy	8.03	9.09		●	
Legacy SW	8.03	9.09		●	
Outback	8.03	9.09		●	
SVX	93				●
SUZUKI					
Baleno	95			●	
Baleno SW	95			●	
Ignis	10.00			●	
Jimny	11.98		●		
Liana	7.01			●	
Liana Sedán	5.02			●	
Swift	89	10.10		●	
Vitara JHT	90		●	●	
Vitara V	90		●	●	
Wagon R+	6.98			●	
TOYOTA					
Avensis	1.98	4.03		●	
Carina E (5dr)	4.92			●	
Celica	90	94		●	
Corolla	92			●	
Corolla Familiar	98	1.02		●	
Hilux	1.97	2.02	●	●	
iQ	4.09			●	
Land Cruiser	90	96	●	●	
Land Cruiser	2.03	1.08			●
Paseo	9.96			●	
Prius+	3.12			●	
Rav-4	6.94	00		●	
Starlet	96			●	
VAUXHALL (UK)					
Agila	4.00	9.07			●
Astra Estate	92	5.98		●	●
Astra	91	97		●	●
Corsa	10.00	7.06			●
Corsa (3/5dr)	12.96	9.00		●	●
Insignia	7.08				●
Insignia Sports Tourer	7.08				●
Tigra	95	9.04		●	●
Tigra Twin Top	9.04				●
VOLKSWAGEN					
Corrado	89	92			●
Golf II	84	10.91	●	●	
Jetta	89	10.05	●	●	
Passat II	80	88	●	●	
Santana	81		●	●	
VOLVO					
340, 343, 345, 360	82		●	●	
740, 760	83	88	●	●	
760	82		●	●	

CHRYSLER					
Voyager	91	12.95		●	
FIAT					
Fiorino	1.88	5.01	●		
FORD					
Courier	99		●	●	
KIA					
Pregio	10.96			●	●
RENAULT					
Express	92		●	●	
SEAT					
Inca	11.95			●	●
VOLKSWAGEN					
Caddy	11.95	3.04		●	

480 mm 19" DV48

ALFA ROMEO					
33	93		●	●	
145	95			●	
146	95			●	
155	4.92			●	
166	10.98			●	
AUDI					
A 3	9.96	5.03		●	
Coupe GT	83	89			●
Quattro	83				●
CADILLAC					
CTS	1.08			●	
CTS Wagon	1.08			●	
CHEVROLET					
Malibu	1.12			●	
Nubira SW	11.04			●	
Orlando	12.10			●	
CHRYSLER					
Neon	5.99			●	
CITROËN					
BX	83				●
C5	3.01	10.04		●	
C5 Break	6.01	10.04		●	
Visa	78		●		●
Visa 2	78		●		●
Xantia II	9.97			●	
Xantia II Familiar	9.97			●	
DAEWOO					
Lacetti	2.04			●	
Lanos	6.97		●	●	●
Leganza	10.97			●	
Nubira	6.03			●	
Tacuma	10.00			●	
DAIHATSU					
Charade	93		●		
DODGE					
Journey	06.08			●	
Nitro	6.07		●	●	
FIAT					
Barchetta	5.95		●	●	
Brava	95			●	
Bravo	9.95	4.07		●	
Cinquecento	92	5.95	●	●	

Coupe	5.94			●	●
Croma	86	94			●
Freemont	8.11			●	
Seicento	4.98		●	●	
Stilo	10.01	1.06		●	
Stilo Multiwagon	3.03			●	
Tipo	88	92	●	●	
Uno	83		●		
FORD					
Fiesta	96	11.01	●	●	
Focus	11.98	11.04		●	
Focus Wagon	11.98	11.04		●	
Maverick	2.01		●	●	
Puma	10.97		●	●	●
Streetka	5.03		●	●	
GALLOPER					
Super Exceed	8.98		●	●	
HONDA					
Accord	11.98	3.03		●	
Accord Coupe	93	2.98		●	
Civic	2.12				●
Civic	89	92	●	●	
Civic (4dr)	9.01	1.06		●	
Civic Coupe	9.01			●	
Civic IMA	1.04	1.06		●	
CR-V (I)	11.97	4.02	●	●	
CRX	92			●	
FR-V	11.04			●	
Legend	93			●	
Prelude	93	12.96		●	●
Prelude	1.97				●
HYUNDAI					
Accent	1.95	3.03			●
INFINITI					
FX	10.08			●	
M	3.10			●	
ISUZU					
D-MAX (Rodeo)	5.02			●	
JAGUAR					
S-Type	6.01			●	
X-Type	6.01			●	
JEEP					
Cherokee	4.00		●	●	
KIA					
Carens	8.99	7.02		●	
Clarus	10.96			●	
Sephia I	95	97		●	
Sephia II	97			●	
Shuma	98			●	
LANCIA					
Dedra	90			●	
Delta	93	9.08		●	
LAND ROVER					
Range Rover	95	3.02			●
LEXUS					
IS	4.99	12.05		●	
IS Sport Cross	10.01			●	
MAZDA					
3	6.09			●	
323 F (5dr/Sedan)	98			●	
626 (Hatchback/Sedan)	5.97			●	
626 SW	2.98			●	
Tribute	3.00		●	●	
MINI					
Cabrio	7.04	11.07		●	
Clubman	10.07	4.12		●	
Mini	9.01	9.06		●	

● = *montar con KIT 133 - mount with KIT 133 - monter avec le KIT 133 - mit KIT 133 montieren - montare con KIT 133 - montar com KIT 133*
■ = *montar con KIT 136 - mount with KIT 136 - monter avec le KIT 136 - mit KIT 136 montieren - montare con KIT 136 - montar com KIT 136*

MITSUBISHI					
Galant	90	92	●		
L200	10.96	11.01	●	●	
L200	11.01	11.05	●		
L200	11.05	10.09		●	
Montero / Pajero	91	4.00	●	●	
Montero IO	10.99			●	
NISSAN					
100 NX	91			●	
200 SX	86	94		●	●
200 SX	95				●
300 ZX	86	94		●	●
Almera	10.95	3.00		●	
Bluebird	89		●	●	●
GT-R	2.09			●	
Navara	10.04			●	
NP300	5.08		●	●	
Pathfinder	3.05			●	
Patrol GR	5.98		●		
Pick-up	1.97	10.04	●	●	
Primera	91	95		●	
Primera	4.02			●	
Primera Sport Wagon	4.02			●	
Sunny	85	89		●	
Sunny SW	86			●	●
Terrano	89		●	●	
OPEL					
Ascona	75				●
Astra (3/5dr)	97	4.04		●	
Astra Caravan	5.98	10.04		●	
Astra Coupe	10.00	3.05		●	
Astra Sedán	9.98	2.07		●	
Calibra	90		●	●	●
Frontera	92		●	●	
Monza	77				●
Omega	87	94	●	●	
Omega	95			●	
Omega Sport Wagon	97			●	
Senator	89		●	●	
Signum	4.03			●	
Vectra	89	4.02	●	●	●
Vectra	4.02			●	
Vectra Caravan	97	11.03	●	●	
Vectra Caravan	11.03			●	
PORSCHE					
924	75		●	●	●
928	85		●	●	
928 GTS	93		●	●	
RENAULT					
R 11	83				●
R 19	6.88				●
R 21 (5dr)	5.89				●
ROVER					
Serie 800	89	4.92	●	●	
SEAT					
Arosa	6.97			●	
Córdoba	12.02			●	
Ibiza III	5.99	3.02		●	
Ibiza IV	3.02	1.06		●	
León	10.99	7.05		●	
Toledo I	12.98	11.04		●	
SKODA					
Fabia (4dr/5dr/Combi)	12.99	3.07		●	
Octavia	96	6.04		●	
Octavia Combi	7.98	1.05		●	
SSANGYONG					
Actyon	10.06			●	
Actyon Sports	4.07			●	
Family			●	●	
Kyron	5.05			●	

SUBARU					
Forester	8.97	1.08		●	
Legacy	95	10.98		●	
Legacy	9.09			●	
Legacy SW	9.09			●	
Outback	9.09			●	
SUZUKI					
Alto	96	12.08	●		
Grand Vitara	11.98		●	●	
Ignis	10.00		●		
TALBOT					
Tagora	82		●	●	
TOYOTA					
Camry	10.92			●	
Celica	94	1.00		●	
Hilux	8.05			●	
Land Cruiser	96	2.03	●	●	
MR2	5.00			●	
Rav-4	00	11.05		●	
VAUXHALL (UK)					
Astra (3/5dr)	97	4.04		●	
Astra Coupe	10.00	3.05		●	
Astra Saloon	9.98	2.07		●	
Astra Estate	5.98	10.04		●	
Calibra	90		●	●	●
Frontera	11.98		●	●	
Omega Sport Wagon	97			●	
Omega	95			●	
Signum	4.03			●	
Vectra	12.96	4.02	●	●	●
Vectra	4.02			●	
Vectra Estate	97	11.03	●	●	
Vectra Estate	11.03			●	
VOLKSWAGEN					
Bora	1.99	6.02		●	
Corrado	89	92	●	●	
Corrado	93		●	●	●
Golf III	11.91	8.97		●	
Golf III Variant	7.93	4.99		●	
Golf IV	8.97	02		●	
Golf IV Variant	5.99	02		●	
Lupo	11.98	02		●	
Polo II	95	10.01	●	●	
Scirocco	81	9.08	●	●	
Vento	4.92			●	
CITROËN					
C15	84		●		
VOLKSWAGEN					
LT	11.82	4.96	●	●	

500 mm 20" DV50

ALFA ROMEO					
GTV	9.94			●	
Spider	5.95	9.06		●	
SZ Zagato	89		●	●	
ASTON MARTIN					
DB 9	1.04			●	
DBS	9.07			●	
Rapide	3.10			●	
AUDI					
100	82	88	●	●	
200	83		●	●	
90	85		●	●	

A 4	1.95	11.00		●	
A 4 Avant	95	01		●	
Coupe GT	83	89	●	●	
Quattro	83		●	●	
S 2	91		●	●	
S 4	91		●	●	
V 8	91		●	●	
AUSTIN					
Maestro	84		●	●	
Montego	84		●	●	
BMW					
Compact (E46)	6.01			●	
M 3 (E30)	86	4.91	●	●	
M 3 (E36)	4.91	00		●	
M3 Cabrio (E36)	95			●	
Serie 3 (E30)	83	91	●	●	
Serie 3 (E36)	91	2.98		●	
Serie 3 (E46)	2.98	1.05		●	
Serie 3 Compact (E36)	95	6.01	●	●	
Serie 3 Coupe (E46)	4.99	6.06		●	
Serie 3 Touring (E30)	82	95	●	●	
Serie 3 Touring (E36)	95	00		●	
Serie 3 Touring (E46)	00	9.05		●	
X3	1.04	9.10		●	
Z1	89		●	●	
Z3	10.95		●	●	
Z3 Coupe	7.97		●	●	
Z4	4.03	5.09		●	
CHATENET					
Stella	4		●		
CHEVROLET					
Blazer	2.98		●	●	
Epica	6.06			●	
CHRYSLER					
Crossfire	11.03		●		
Neon	11.94	4.99	●		
PT Cruiser Convertible	5.04		●		
CITROËN					
BX	83		●	●	
Evasión	95			●	
Saxo	4.96		●		
Xantia	4.93	8.97		●	
Xsara	9.97			●	
DACIA					
Duster	4.10		●	●	
Logan	6.05	11.12	●	●	
Logan	11.12			●	
Logan Break	2.07	3.13	●	●	
Logan MCV	3.13			●	
Sandero	6.08	4.13	●	●	
Sandero	4.13			●	
DAEWOO					
Compact	5.97		●	●	
Evanda	12.02			●	
Nubira	9.97	6.03	●	●	
Nubira Wagon	5.97	11.04	●	●	
DAIHATSU					
Terios	4.97	7.06	●		
DODGE					
Charger	1.12			●	
FERRARI					
Mondial 8	80		●	●	
FIAT					
Croma	86	94	●	●	
Ulysse	95	11.02		●	
FORD					
Cougar	11.98			●	

● = *montar con KIT 133 - mount with KIT 133 - monter avec le KIT 133 - mit KIT 133 montieren - montare con KIT 133 - montar com KIT 133*
■ = *montar con KIT 136 - mount with KIT 136 - monter avec le KIT 136 - mit KIT 136 montieren - montare con KIT 136 - montar com KIT 136*

Mondeo	3.93	11.00	●	●	
Mondeo (4-5dr)	11.00	3.07		●	
Mondeo Wagon	3.93	11.00	●	●	
Mondeo Wagon	11.00	3.07		●	
Probe	95		●	●	●
Tourneo Connect	6.02	13		●	
HONDA					
Accord	91	10.98		●	
Civic	93	12.94	●		
Civic (3-5dr)	1.95	9.01	●		
CR-V (II)	4.02	11.06		●	
CRX	92		●		
CR-Z	6.10			●	
HRV	3.99		●		
Jazz	4.02	7.08	●		
Legend	93		●		
Logo	3.99		●		
NSX	95		●	●	
Prelude	93		●		
S2000	10.99			●	
HYUNDAI					
Accent	1.95	7.06	●		
Atos	2.98		●		
Coupe	2.02				●
Elantra	6.00		●		●
Genesis	1.08			●	
H-1	10.97			●	
Lantra	92		●		
Lantra SW	9.98		●		
Santa Fe	2.01	3.06		●	
Sonata	92	10.98	●		
Sonata	11.98	4.05		●	
Sonata	4.05	1.10		●	
Terracan	2.02			●	
XG	2.99			●	
ISUZU					
Trooper	4.00		●	●	
JEEP					
Cherokee	91	3.97	●	●	
Compass	9.06			●	
Gran Cherokee	93	3.97	●	●	
KIA					
Magentis	5.01	4.06		●	
Sorento	11.09			●	
Soul	2.09			●	
Sportage	95	9.04	●	●	
LADA					
Priora (2170)	10.04		●	●	●
Priora (2172)	10.04		●	●	●
LANCIA					
Dedra	90		●		
K	95			●	
Thema	85	94	●	●	
Thema	9.11			●	
Z	4.95			●	
LEXUS					
GS	8.97	4.05		●	
IS	12.05	6.13		●	
SC	8.01			●	
MASERATI					
228	89		●	●	
420-430	89		●	●	
Ghibli	93		●	●	
Plus	89		●	●	
Quattroporte	95	3.04		●	
Shamal	93		●	●	
Spider	93		●	●	
MAZDA					
6 (5dr)	6.02	8.07			●

6 (5dr)	8.07	1.13			●
626	4.92	97		●	
626 (Hatchback/Sedan)	5.97				●
Demio	8.98		●		
MPV	6.97	9.99		●	
MX6	93		●	●	
RX 7 Cabrio	93		●	●	●
RX-8	7.03		●		
Xedos	93			●	
Xedos 9	7.93		●	●	
MERCEDES BENZ					
200, 300 (W123)	76	85	●	●	
200, 300 CE (C123)	77	85	●	●	
C Class (W203)	5.00	4.04		●	
Clase C Spcoup. (CL203)	3.01	4.04		●	
MG					
TF	6.01		●	●	
ZS	6.01		●		
MITSUBISHI					
3000 GT	93			●	
Carisma	10.96			●	●
Colt	95	4.04	●		
Eclipse	93		●	●	
Montero / Pajero	4.00	2.07	●	●	
Montero / Pajero	2.07			●	
Montero Sport	11.98		●	●	
NISSAN					
100 NX	91				●
200 SX	86	94	●		
300 ZX	86	94	●		
350 Z	6.03		●		
350Z Roadster	6.05		●		
Almera Tino	8.00				●
Cherry	85		●	●	
Cube	3.10		●	●	
Máxima	89	94		●	
Micra	1.93	2.03	●		
Patrol GR	5.98			●	
Primastar	9.02			●	
Primera	96	4.02		●	
Primera Sport Wagon	98	4.02		●	
Sunny	85	89	●		
Sunny	89	90	●	●	
Sunny SW	86		●		
Terrano II	2.93			●	
OPEL					
Agila	4.00	9.07	●		
Astra (3/5dr)	97	4.04	●		
Astra Caravan	5.98	10.04	●		
Astra Coupe	10.00	3.05	●		
Astra Sedán	9.98	2.07	●		
Combo	10.01		●		
Corsa	10.00	7.06	●		
Monterey	93		●	●	
Tigra	95	9.04			●
Tigra Twin Top	9.04		●		
PEUGEOT					
106	95		●		
306	3.93			●	●
406 Coupe	97			●	
806	95			●	
PORSCHE					
911	7.04	11.11		●	
Boxster	11.04	4.12		●	
Panamera	9.09			●	
RENAULT					
Clio I	95	4.98	●	●	
Kangoo (4dr)	98	2.08	●	●	
Kangoo (5dr)	11.97	2.08	●	●	
Laguna II	01	10.07		●	

Laguna II Grand Tour	01	10.07		●	
Mégane (4/5dr)	2.95	10.02		●	
Mégane Coupe	2.95	10.02		●	
R 19	6.88		●	●	
R 21	4.89		●	●	
R 21 (5dr)	5.89		●	●	
R 21 Nevada	5.89		●	●	
Savanna	5.89		●	●	
ROVER					
45	2.00		●		
MGF	4.96		●	●	
Serie 400	1.97	2.00	●		
Serie 600	95			●	
Serie 800	4.92		●	●	
SAAB					
9-3	3.98	9.02			●
900	95				●
SEAT					
Córdoba	99	02	●		
Ibiza I	89	92	●		
Ibiza II	92	4.99	●	●	
Toledo II	91	11.98	●	●	
SKODA					
Favorit	93		●	●	
Felicia	4.95		●	●	
Forman	95		●	●	
SMART					
Roadster Cabrio	4.03		●		
Roadster Coupe	4.03		●		
SSANGYONG					
Actyon	10.06				●
Musso	95	97	●	●	
Musso	98		●		
Musso Sports Pick-up	2.04		●		
Rexton	7.02		●	●	
SUBARU					
BRZ	6.12			●	
Justy	1.07		●		
Legacy	91	94	●		
Legacy	10.98	8.03		●	
Legacy SW	12.98	8.03		●	
Outback	3.99	8.03		●	
SVX	93			●	
SUZUKI					
Baleno	95		●		
Baleno SW	95		●		
Kizashi	10.10			●	
Wagon R+	6.98		●		
TALBOT					
Murena	80		●	●	
TATA					
Indica	10.98	6.10	●	●	
Safari	8.98			●	
TOYOTA					
Carina E (5dr)	4.92				●
Celica	90	94	●		
Celica	94	1.00			●
Corolla	92	1.02	●		
Corolla Familiar	98	1.02	●		
GT-86	3.12			●	
Land Cruiser	1.08			●	
Paseo	9.96		●		
Rav-4	6.94	00	●		
Starlet	96		●		
VAUXHALL (UK)					
Agila	4.00	9.07	●		
Astra (3/5dr)	97	4.04	●		
Astra Coupe	10.00	3.05	●		

● = *montar con KIT 133 - mount with KIT 133 - monter avec le KIT 133 - mit KIT 133 montieren - montare con KIT 133 - montar com KIT 133*
■ = *montar con KIT 136 - mount with KIT 136 - monter avec le KIT 136 - mit KIT 136 montieren - montare con KIT 136 - montar com KIT 136*

Astra Estate	5.98	10.04	●		
Astra Saloon	9.98	2.07	●		
Combo	3.02		●		
Corsa	10.00	7.06	●		
Monterey	93		●	●	
Tigra	95	9.04			●
Tigra Twin Top	9.04		●		
VOLVO					
480 ES	86		●	●	
740, 760	89	93	●	●	
850	10.93	96		●	
850 SW	10.93	96		●	
940	91		●	●	
S 40	96	2.04		●	
V 40	96	3.12		●	
CHRYSLER					
Grand Voyager	10.07			●	
PT Cruiser	6.00		●		
CITROËN					
C25	9.81		●	●	
C35	9.81		●	●	
Jumpy	6.94			●	
FIAT					
Ducato	1.82	3.94	●	●	
Scudo	2.96			●	
LANCIA					
Voyager	9.11			●	
PEUGEOT					
Expert	95			●	
VOLKSWAGEN					
Caddy	11.95	3.04	●		

530 mm 21" DV53

ALFA ROMEO					
155	4.92		●		
156	1.97			●	
164	89		●	●	
166	10.98		●		
ASTON MARTIN					
DB 7	95		●	●	
AUDI					
80	83		●	●	
A 3	9.96	5.03	●		
A 4	1.95	11.00	●		
A 4 Avant	95	01	●		
A 6	6.94	2.97		●	
A 6 Avant	6.94	12.97		●	
A 8	6.94	1.01	●	●	
RS 2 Avant	5.95		●	●	
TT	11.98	8.03	●	●	
TT Roadster	11.98	8.03	●	●	
BMW					
Compact (E46)	6.01		●		
M 3 (E36)	4.91	00	●		
Serie 3 (E36)	91	2.98	●		
Serie 3 Cabrio	4.00	3.07	●	●	
Serie 3 Touring (E36)	95	00	●		
Z4	4.03	5.09	●		
CADILLAC					
CTS	4.03	1.08		●	
SRX	10.04	1.09		●	

CHEVROLET					
Camaro	1.11			●	
CHRYSLER					
Crossfire	11.03			●	
PT Cruiser Convertible	5.04			●	
CITROËN					
C4 Aircross	4.12			●	
C-Crosser	2.07			●	
CORVETTE					
C6 Convertible	5.05		●	●	
C6 Coupe	11.04		●	●	
Z06	2.05		●	●	
DAEWOO					
Matiz	9.98		●		
DAIHATSU					
Terios	7.06		●		
DODGE					
Durango	1.11			●	
FERRARI					
F430	3.05			●	
FIAT					
Coupe	5.94		●		
HONDA					
Civic (4dr)	9.01	1.06	●		
Civic Coupe	9.01		●		
Civic IMA	1.04	1.06	●		
CR-V (II)	4.02	11.06	●		
JAGUAR					
XJ	95	3.03	●	●	
XK Convertible	3.96	2.06	●	●	
XK Convertible	3.06			●	
XK Coupe	3.06			●	
JEEP					
Grand Cherokee	4.97	11.10	●	●	
Grand Cherokee	11.10			●	
Patriot	2.07		●	●	
KIA					
Clarus	10.96		●		
Magentis	5.01	4.06	●		
Rio	9.00	3.05	●		
Sephia I	95	97	●		
Sephia II	97		●		
Shuma	98		●		
LANCIA					
Delta	93	9.08	●		●
Lybra	7.99			●	
Lybra SW	7.99			●	
Thesis	1.02			●	
LAND ROVER					
Freelander	1.98	2.06		●	
MASERATI					
Quattroporte	95	3.04	●		
MAZDA					
323	93	98	●		
323 F (5dr/Sedan)	98		●		
626	4.92	97	●		
626 (Hatchback/Sedan)	5.97		●		
626 SW	2.98		●		
MX3	93		●		●
Xedos	93		●		
MITSUBISHI					
3000 GT	93		●		
ASX	2.10			●	
Carisma	10.96		●		
Galant	92	8.96	●		

Outlander	11.06	8.12		●	
Space Gear	5.95		●		
Space Star	6.98	12.04	●		
NISSAN					
100 NX	91		●		
200 SX	95			●	
300 ZX	95			●	●
370 Z	6.09		●		
Almera	10.95		●		
Máxima	89	94	●		
Micra	2.03		●		
Pathfinder	1.99	3.05		●	
Pixo	6.09		●		
Primera	91	4.02	●		●
Primera Sport Wagon	98	4.02	●		
Terrano II	2.93		●		
OPEL					
Vivaro Combi	8.01			●	
PEUGEOT					
607	2.00			●	
4007	2.07			●	
4008	5.12			●	
PORSCHE					
911	9.97	7.04		●	
Boxster	9.96	11.04		●	
RENAULT					
Clio II	5.98	9.05	●		
Mégane (4/5dr)	2.95	10.02	●		
Trafic	3.01			●	
SAAB					
9-3	3.98	9.02	●	●	
9-3 Cabrio	2.98	10.03	●	●	
900	95		●	●	
9000	84		●	●	●
SEAT					
Arosa	6.97		●		
Córdoba	1.94	99	●		
Córdoba	12.02		●		
Córdoba Vario	99		●		
Ibiza III	5.99	3.02	●		
Ibiza IV	3.02	1.06	●		
León	10.99	7.05	●		
Toledo I	12.98	11.04	●		
SKODA					
Fabia (4dr/5dr/Combi)	12.99	3.07	●		
Octavia	96	6.04	●		
Octavia Combi	7.98	1.05	●		
SMART					
City-Coupe / Fortwo	7.98	1.07	●	●	
SUBARU					
Forester	8.97	1.08	●		
Impreza	93	12.00	●		
Impreza SW	93	12.00	●		
Legacy	95	10.98	●		
SUZUKI					
Alto	1.09		●		
Swift	4.05	4.05	●		
TOYOTA					
Avensis	1.98	4.03	●		
Camry	10.92		●		
Carina E (5dr)	4.92		●		
Celica	90	94			●
Celica	94	1.00	●		
Hilux	8.05		●		
Land Cruiser	2.03	1.08		●	
Yaris	4.99	1.06	●		
VAUXHALL (UK)					
Vivaro	8.01			●	

● = *montar con KIT 133 - mount with KIT 133 - monter avec le KIT 133 - mit KIT 133 montieren - montare con KIT 133 - montar com KIT 133*
■ = *montar con KIT 136 - mount with KIT 136 - monter avec le KIT 136 - mit KIT 136 montieren - montare con KIT 136 - montar com KIT 136*

VOLKSWAGEN					
Bora	1.99	6.02	●		
Golf III	11.91	8.97	●		
Golf III Variant	7.93	4.99	●		
Golf IV	8.97	02	●		
Golf IV Variant	5.99	02	●		
Lupo	11.98	02	●		
New Beetle	5.99	10.11	●	●	
New Beetle Cabrio	4.03		●	●	
Passat III	88	92	●	●	
Passat IV	93	96	●	●	
Passat V	97	1.01	●	●	
Passat Variant	97	1.01	●	●	
Vento	4.92		●		
VOLVO					
440-460	89		●	●	
850	10.93	96	●		
850 SW	10.93	96	●		
C 70	9.97	1.06	●	●	
S 40	96	2.04	●		
S 60	3.00	8.04		●	
S 70	96		●	●	
S 80	10.98	4.03		●	
S 90	96		●	●	
V 40	96	3.12	●		
V 70	96	3.00	●	●	
V 70	3.00	8.04		●	
V 90	96		●	●	
XC 70	9.00	8.04		●	
CHRYSLER					
PT Cruiser	6.00			●	
KIA					
Pregio	10.96		●		
SEAT					
Inca	11.95		●		
VOLKSWAGEN					
California	95	7.03	●	●	
Caravelle	95	7.03	●	●	
Transporter	95	7.03	●	●	

550 mm 22" DV55

ALFA ROMEO					
145	95		●		
146	95		●		
156	1.97		●		
GTV	9.94		●		
Spider	5.95	9.06	●		
ASTON MARTIN					
Cignet	4.11		●		
AUDI					
100	89		●	●	
A 6	6.94	2.97	●		
A 6	2.97	8.01	●	●	
A 6 Avant	6.94	12.97	●		
A 6 Avant	12.97	8.01	●	●	
Cabriolet	5.95		●	●	
Coupe	89		●	●	●
S 6	5.95		●	●	
S 8	9.97		●	●	
BMW					
M3 Cabrio (E36)	95		●		
Serie 3 (E46)	2.98	1.05	●		
Serie 3 Coupe (E46)	4.99	6.06	●		
Serie 3 Touring (E46)	00	9.05	●		
Serie X5	5.00	2.07		●	
X3	1.04	9.10	●		
Z4	5.09		●	●	
CADILLAC					
ATS	2.13		●		
BLS	4.06		●	●	
CTS	4.03		●		
CTS Wagon	1.08		●		
Escalade	10.06		●	●	
Seville	98		●	●	
SRX	10.04	1.09	●		
CHEVROLET					
Alero	3.99		●		
Aveo (3/5dr)	4.08	3.11	●		
Aveo (4dr)	1.06	3.11	●		
Blazer trail	9.01		●	●	
Corvette	9.97	2.05	●	●	
Corvette Cabrio	9.97	5.05	●	●	
Epica	6.06		●		
Matiz	4.05		●		
Nubira SW	11.04		●		
Spark	3.10		●		
Tahoe	12.99		●	●	
Trail Blazer	9.01		●	●	
CHRYSLER					
300 C	7.04		●	●	
300 C SW	11.04		●	●	
300 M	10.98	97		●	
Neon	5.99		●		
Sebring	4.01	7.07	●	●	
Sebring	7.07			●	
Sebring Cabrio	4.01	7.07	●	●	
Sebring Cabrio	7.07			●	
Stratus	96		●	●	
CITROËN					
AX	86		●		
Pluriel	5.03		●		
XM	90		●	●	
Xsara	9.97		●		
ZX	4.91		●		
DACIA					
Dokker	11.12		●		
Lodgy	3.12		●		
Logan	11.12		●		
Logan MCV	3.13		●		
Sandero	4.13		●		
DAEWOO					
Evanda	12.02		●		
Kalos	11.02		●		
Lacetti	2.04		●		
Leganza	10.97		●		
Nubira	6.03		●		
DODGE					
Avenger	6.07			●	
Durango	1.11		●		
RAM	1.03		●	●	
FIAT					
Brava	95		●		
Bravo	9.95	4.07	●		
Dobló Cargo	3.01	2.10	●		
Dobló Panorama	3.01	2.10	●		
Idea	1.04		●		
Marea	1.97		●		
Multipla	1.99			●	
Panda	9.03	2.12	●		
Punto	94	10.05	●		
Stilo	10.01	1.06	●		
Stilo Multiwagon	3.03		●		
FORD					
Cougar	11.98		●		●
Fiesta (3/5dr)	11.01	10.08	●		
Focus	11.98	11.04	●		
Focus Wagon	11.98	11.04	●		
Fusion	11.02		●		
Mondeo (4-5dr)	11.00	3.07	●		
Mondeo Wagon	11.00	3.07	●		
Tourneo Connect	6.02	13	●		
GALLOPER					
Santamo	11.98		●		
HONDA					
Accord	91	3.03	●		
Accord	7.08			●	
Accord Coupe	93		●		
Accord Tourer	7.08			●	
Civic	1.06	2.12		●	
HYUNDAI					
Accent	7.06		●		
Coupe	96	2.02	●		●
Coupe	2.02		●		
Getz	11.02		●		
i10	1.08		●		
Matrix	6.01		●		
Santa Fe	2.01	3.06	●		
Sonata	11.98	4.05	●		
Terracan	2.02		●		
Trajet	3.00			●	
XG	2.99		●		
INFINITI					
EX	10.08		●		
FX	10.08		●		
ISUZU					
D-MAX (Rodeo)	5.02		●		
JAGUAR					
XK Convertible	3.06		●		
XK Coupe	3.06		●		
X-Type	6.01		●		
JEEP					
Compass	9.06		●		
Grand Cherokee	11.10		●		
KIA					
Picanto	4.04		●		
Rio	3.05	9.11	●		
Rio (5dr)	7.05		●		
LANCIA					
Flavia	3.12			●	
Lybra	7.99		●		
Lybra SW	7.99		●		
Musa	10.04		●		
Ypsilon	2.96	10.02	●		
LAND ROVER					
Discovery	10.04		●	●	
Freelander	1.98	2.06	●		
Range Rover	95	3.02	●	●	
Range Rover Sport	6.05	8.13	●	●	
LEXUS					
IS	4.99	6.13	●		
IS Sport Cross	10.01		●		
RX	6.03			●	
MAZDA					
6 (4-5dr)	6.02	8.07	●		
6 Wagon	11.02	8.07	●		
MPV	6.97	9.99	●		
RX 7 Coupe	89		●	●	●
MERCEDES BENZ					
C Class SW (S203)	3.01	4.04		●	
M Class (W163)	3.98	6.05	●	●	
S Class (W126)	80	6.91	●	●	

● = *montar con KIT 133 - mount with KIT 133 - monter avec le KIT 133 - mit KIT 133 montieren - montare con KIT 133 - montar com KIT 133*
■ = *montar con KIT 136 - mount with KIT 136 - monter avec le KIT 136 - mit KIT 136 montieren - montare con KIT 136 - montar com KIT 136*

SLK Class (R170)	11.94	4.04	●	●	
V Class	10.96			●■	
MB 100	87		●	●	
MG					
ZT	6.01		●	●	
MITSUBISHI					
Galant	92	8.96			●
Galant	8.96		●		
Galant Wagon	93		●		
L200	11.05		●		
Montero / Pajero	2.07		●		
Outlander	4.03	11.06	●		
Space Runner	95		●		
Space Star	1.13		●		
NISSAN					
200 SX	95		●		
300 ZX	95		●		
Almera(4dr)	7.00		●		
GT-R	2.09		●		
Juke	6.10		●		
NV200	2.10		●		
Pathfinder	1.99	3.05	●		
OPEL					
Agila	9.07		●		
GT	6.07			●	
PEUGEOT					
306	3.93		●		
405	10.88	2.90	●	●	
406	11.95			●	
406 SW	10.96			●	
605	8.89		●	●	
Partner	9.96	4.08	●	●	
PORSCHE					
911	9.97	11.11	●		
Boxster	9.96	4.12	●		
Carrera GT	7.03		●		
Panamera	9.09		●		
RENAULT					
Alpine A610	4.91		●	●	
Espace I	84	3.89	●	●	
Laguna	1.94	01			●
Mégane Coupe	2.95	10.02	●		
R 25			●	●	●
Spider	1.97		●		
REVA					
REVAi / L-ion	08		●		
ROVER					
75	2.99		●	●	
Serie 600	95		●		
SAAB					
9-3	9.02	2.08	●	●	
9-3 Cabrio	10.03	2.08	●	●	
9-3 Sport Hach	8.05	2.08	●	●	
9-5	10.97		●	●	
9-5 SW	10.98		●	●	
SSANGYONG					
Actyon	10.06		●		
Actyon Sports	4.07		●		
Kyron	5.05		●		
SUBARU					
BRZ	6.12		●		
Impreza	12.00	1.08	●		
Impreza SW	12.00		●		
Legacy	10.98	8.03	●		
Legacy SW	12.98	8.03	●		
Outback	3.99	8.03	●		
R1	11.06		●		
SVX	93		●		

SUZUKI					
Liana	7.01		●		
Liana Sedán	5.02		●		
Splash	1.08		●		
Swift	10.10		●		
TASSO					
Bingo			●		
TOYOTA					
Avensis Verso	8.01		●		
Corolla (3/5dr)	1.02		●		
Corolla Verso	1.02	5.04	●		
GT-86	3.12		●		
iQ	4.09		●		
Land Cruiser	2.03	1.08	●		
Land Cruiser 100	1.98			●	
Land Cruiser 200	2.08			●	
VAUXHALL (UK)					
Agila	9.07		●		
GT	6.07			●	
VOLKSWAGEN					
Amarok	9.10	5.12		●	
Fox	6.05		●		
VOLVO					
XC 90	10.02	8.04		●	
CHRYSLER					
Voyager	91	12.95	●		
CITROËN					
Berlingo	9.96	4.08	●	●	
Jumper	5.95	4.06	●	●	
FIAT					
Ducato	3.94	7.06	●	●	
FORD					
Transit	9.85	7.00	●	●	
Transit Tourneo	11.94	12.00	●	●	
MERCEDES BENZ					
Sprinter	95	5.06		●	
PEUGEOT					
Boxer	95	4.06	●	●	
RENAULT					
Kangoo Express	2.08		●	●	
VOLKSWAGEN					
LT	4.96			●	

600 mm 24" DV60

ASTON MARTIN					
DB9	1.04		●		
DBS	9.07		●		
Rapide	3.10		●		
BMW					
Serie X5	5.00	2.07	●		
CHEVROLET					
Camaro	1.11		●		
Captiva	7.06		●		
Cruze (4dr)	5.09		●		
Cruze (5dr)	6.11		●		
Cruze SW	8.12		●		
Malibu	1.12		●		
Orlando	12.10		●		
CHRYSLER					
300 M	10.98	97	●		

Sebring	7.07		●		
Sebring Cabrio	7.07		●		
CITROËN					
C2	9.03		●		
C3	5.02	11.09	●		
C4 Aircross	4.12		●		
C-Crosser	2.07		●		
CX	74		●		
Xantia	4.93	8.97	●		
Xantia II	9.97		●		
Xantia II Familiar	9.97		●		
DAEWOO					
Tacuma	10.00		●		
DODGE					
Avenger	6.07		●		
Caliber	6.06		●		
Charger	1.12		●		
Journey	06.08		●		
FERRARI					
612 Scaglietti	4.04		●		
F430	3.05		●		
FIAT					
Freemont	8.11		●		
Multipla	1.99		●		
Palio Weekend	2.98		●		
Strada	6.99		●		
FORD					
Ka	10.08		●		
Ranger	4.11		●		
HONDA					
Accord	7.08		●		
Accord Tourer	7.08		●		
Civic (3/5dr)	9.01	1.06	●		
CR-Z	6.10		●		
Stream	6.01		●		
HYUNDAI					
Genesis	1.08		●		
i20	9.08		●		
ix35	1.10		●		
Santa Fe	3.06	9.12	●		
Sonata	4.05	1.10	●		
Tucson	11.04		●		
JAGUAR					
S-Type	6.01		●		
KIA					
Carens	8.99	9.06	●		
Carnival	3.99	6.06	●	●	
Cerato	6.04		●		
Magentis	4.06		●		
Opirus	10.03		●		
Optima	3.12		●		
Sorento	7.02		●		
Soul	2.09		●		
Sportage	9.04		●		
LADA					
Kalina (1118)	10.04		●		
Kalina (1119)	10.04		●		
LANCIA					
Flavia	3.12		●		
K	95		●		
Thema	9.11		●		
Ypsilon	10.02	5.11	●		
LEXUS					
GS	8.97	1.12	●		
IS	6.13		●		
LS	4.06		●		
SC	8.01		●		

● = *montar con KIT 133 - mount with KIT 133 - monter avec le KIT 133 - mit KIT 133 montieren - montare con KIT 133 - montar com KIT 133*
■ = *montar con KIT 136 - mount with KIT 136 - monter avec le KIT 136 - mit KIT 136 montieren - montare con KIT 136 - montar com KIT 136*

LIGIER				
JS 16	94		●	
MAZDA				
2	4.03		●	
3	6.09		●	
6	8.07		●	
6 SW	8.07		●	
MPV	9.99		●	●
Premacy	7.99		●	
MERCEDES BENZ				
190 (W201)	84	93	●	
A Class (W168)	7.97	10.04		●
C Class (W202)	3.93	5.00	●	
C Class (W203)	5.00	4.04	●	
C Class Sp.coup. (CL203)	3.01	4.04	●	
C Class SW (S203)	3.01	4.04	●	
CLK Class (C208)	97	5.02	●	
E Class (W124)	93	97	●	
E Class (W210)	95	3.02	●	
Vaneo	11.01	04		●
MITSUBISHI				
ASX	2.10		●	
Lancer	1.08		●	
Lancer EVO VII	2.01		●	
Lancer Sportback	6.08		●	
Outlander	11.06	8.12	●	
NISSAN				
Navara	10.04	3.10	●	
Navara	3.10		●	
Note	3.06	9.13	●	
Pathfinder	3.05		●	
Primastar	9.02		●	
Serena	10.92		●	●
X-Trail	7.01		●	
OPEL				
Antara	5.06		●	
Insignia	7.08		●	
Insignia Sports Tourer	7.08		●	
Meriva	4.03	6.10	●	●
Omega	95		●	
Omega Sport Wagon	97		●	
Signum	4.03		●	
Sintra	97		●	●
Vectra	4.02		●	
Vectra Caravan	11.03		●	
Vivaro Combi	8.01		●	
Zafira	4.99	9.05	●	●
PEUGEOT				
206 SW	5.02		●	
406	11.95		●	
406 SW	10.96		●	
1007	6.05		●	
4007	2.07		●	
4008	5.12		●	
RENAULT				
Espace II	4.89	97	●●	●●
Laguna	1.94	01	●	
Laguna II	01	10.07	●	
Laguna II Grand Tour	01	10.07	●	
Latitude	2.11		●	
Mégane	10.02	1.06	●	
Mégane Cabrio	10.03	1.06	●	
Mégane Grand Tour	9.03	1.06	●	
Mégane Sedan	9.03	1.06	●	
Trafic	3.01		●	
SSANGYONG				
Korando	11.10		●	
Rodius	5.05		●	
SUBARU				
Forester	1.08		●	

Impreza	1.08		●	
Legacy	8.03	9.09	●	
Legacy SW	8.03	9.09	●	
Outback	8.03	9.09	●	
SUZUKI				
Kizashi	10.10		●	
TATA				
Indica Vista	6.10		●	
Indigo SW	1.03		●	
Safari	8.98		●	
TOYOTA				
Avensis	4.03	1.09	●	
Avensis (5dr)	4.03	1.09	●	
Avensis Wagon	4.03	1.09	●	
Land Cruiser 100	1.98		●	
Land Cruiser 200	2.08		●	
MR2	5.00		●	
Picnic	2.99		●	
Rav-4	00	5.13	●	
Urban Cruiser	4.09		●	
Yaris	1.06	9.11	●	
VAUXHALL (UK)				
Antara	5.06		●	
Insignia	7.08		●	
Insignia Sports Tourer	7.08		●	
Meriva	4.03	6.10	●	●
Omega	95		●	
Omega Sport Wagon	97		●	
Signum	4.03		●	
Sintra	97		●	●
Vectra	4.02		●	
Vectra Estate	11.03		●	
Vivaro	8.01		●	
Zafira	4.99	9.05	●	●
VOLKSWAGEN				
Amarok	9.10	5.12	●	
Multivan	11.09		●	●
VOLVO				
S 60	3.00	8.04	●	
S 80	10.98	4.03	●	
V 70	3.00	8.04	●	
XC 70	9.00	8.04	●	
XC 90	10.02	8.04	●	
BMC				
Megastar	04			●
CHEVROLET				
Trans Sport	2.98		●	●
CHRYSLER				
Grand Voyager	10.07		●	
FORD				
Transit	7.00			●
LANCIA				
Voyager	9.11		●	
MERCEDES BENZ				
Sprinter	95	5.06	●	
NISSAN				
Interstar	7.02	10.11	●■	●■
Vanette Cargo	1.95		●	●
RENAULT				
Mascott	1.99	6.04	●■	●■
Master	7.98	2.10	●■	●■
VOLKSWAGEN				
LT	4.96		●	
Transporter	7.03		●	●

650 mm 26" DV65

CITROËN				
C1	6.05		●	
C5	3.01	10.04	●	
C5 Break	6.01	10.04	●	
Evasión	95		●	
Xsara Picasso	12.99	10.05	●	●
FERRARI				
599 GTB	6.06		●	
California	7.08		●	
FIAT				
Sedici	6.06		●	
Ulysse	95	11.02	●	
HONDA				
Accord	2.06	7.08	●	
Accord (4dr)	3.03	2.06	●	
Accord Tourer	3.03	7.08	●	
Civic	1.06		●	
CR-V (III)	1.07	10.12	●	
CR-V (IV)	10.12		●	
FR-V	11.04		●	
Insight	4.09		●	
Jazz	7.08		●	
HYUNDAI				
H-1	10.97		●	
i30	11.11		●	
i30 CW	6.12		●	
i40	3.12		●	
i40 CW	7.11		●	
Santa Fe	9.12		●	
Sonata	1.10		●	
Trajet	3.00		●	
Veloster	3.11		●	
INFINITI				
G37 Cabrio	9.10		●	
G37 Coupe	10.08		●	
G37 Sedán	10.08		●	
M	3.10		●	
KIA				
Carens	9.06	4.13	●	
Carnival	6.06		●	
Rio	9.11		●	
LANCIA				
Phedra	11.02		●■	●■
Thesis	1.02		●	
Z	4.95		●	
LEXUS				
CT	12.10		●	
GS	1.12		●	
RX	6.03		●	
LOTUS				
Exige	9.01		●	
MASERATI				
Gran Cabrio	6.10		●	
Gran Turismo	8.08		●	
Quattroporte	3.04		●	
MAZDA				
5	2.05		●	
CX-5	11.11		●	
CX-7	10.07		●	
MERCEDES BENZ				
A Class (W168)	7.97	10.04	●	
E Class SW (S210)	96	3.03	●	
V Class	10.96		●■	
Vaneo	11.01	04	●	
MITSUBISHI				
Colt	4.04		●	

● = *montar con KIT 133 - mount with KIT 133 - monter avec le KIT 133 - mit KIT 133 montieren - montare con KIT 133 - montar com KIT 133*
■ = *montar con KIT 136 - mount with KIT 136 - monter avec le KIT 136 - mit KIT 136 montieren - montare con KIT 136 - montar com KIT 136*

Colt CZC	4.06		●	
Outlander	8.12		●	
NISSAN				
Almera Tino	8.00		●	
Leaf	11.10		●	
Máxima	95		●	
Murano	10.08		●	
Note	9.13		●	
Primera	4.02		●	
Primera Sport Wagon	4.02		●	
PEUGEOT				
107	6.05		●	
206	10.98		●	
206 CC	01		●	
206+	1.09		●	
307	6.01	5.05	●	●
307 SW	5.02	5.05	●	●
406 Coupe	97		●	
607	2.00		●	
806	95		●	
RENAULT				
Avantime	9.01		●	
Espace III	98	11.02	●●	
Twingo	93	3.07	●	
SMART				
Forfour	4.04		●	
SUBARU				
Legacy	9.09		●	
Legacy SW	9.09		●	
Outback	9.09		●	
XV	3.12		●	
SUZUKI				
SX4	6.06		●	
TOYOTA				
Auris	10.06		●	
Auris SW Sports	6.13		●	
Aygo	6.05		●	
Corolla Sedan	5.07		●	
Corolla Verso	5.04		●	
Land Cruiser	1.08		●	
Prius II	8.03	3.09	●	
Prius III	3.09		●	
Prius+	3.12		●	
Rav-4	5.13		●	
Verso	4.09		●	

BMC				
Megastar	04		●	
CITROËN				
Jumpy	6.94		●	
FIAT				
Scudo	2.96		●	
MERCEDES BENZ				
Viano (W639)	9.03	2.05	●■	●■
NISSAN				
NV400	10.11		●	●
OPEL				
Movano	4.10		●	●
PEUGEOT				
Expert	95		●	
RENAULT				
Master	2.10		●	●
VAUXHALL (UK)				
Movano	4.10		●	●

700 mm 28" DV70

AUDI				
A2	2.00	01	●	
CITROËN				
C-Zero	10.10		●	
FERRARI				
FF	6.11		●	
FORD				
Galaxy	95	01	●	●
HONDA				
FCX	7.08		●	●
KIA				
Carens	4.13		●	●
MERCEDES BENZ				
S Class (W220)	10.98	9.01	●	●

MITSUBISHI				
i-MIEV	11.10		●	
PEUGEOT				
iOn	11.10		●	
SEAT				
Alhambra	95	01	●	●
SUBARU				
Trezia	3.11		●	
TOYOTA				
Verso S	11.10		●	
Yaris	9.11		●	
VOLKSWAGEN				
Sharan	95	01	●	●
CHRYSLER				
Grand Voyager	1.96	10.07	●	●
Voyager	1.96		●	●
FORD				
Tourneo Courier	13		●	●
Transit	7.00		●	

● = *montar con KIT 133 - mount with KIT 133 - monter avec le KIT 133 - mit KIT 133 montieren - montare con KIT 133 - montar com KIT 133*
■ = *montar con KIT 136 - mount with KIT 136 - monter avec le KIT 136 - mit KIT 136 montieren - montare con KIT 136 - montar com KIT 136*

DURAVISION FLEX

350 mm 14" — DVF 35

CHEVROLET					
Matiz	4.05			●	
Trax	12.12			●	
DAEWOO					
Matiz	9.98				●
DAIHATSU					
Charmant	78	82	●	●	●
FIAT					
127	78		●	●	
128	70		●	●	
131	74		●	●	
132	72		●	●	
500	10.07			●	
850	68		●	●	
Panda	2.12			●	
Sedici	6.06			●	
1300-2300					
2000 Sport	77		●	●	
Coupe	68		●	●	
Spider	68		●	●	
Uno	83				●
FORD					
Capri	74	80	●	●	
Ka	10.08			●	
Capri	74	80	●	●	
HONDA					
Civic	72	86	●	●	
Jazz	7.08			●	
Stream	6.01			●	
HYUNDAI					
Atos	2.98				●
Getz	11.02			●	●
i30	11.11			●	
i30 CW	6.12			●	
i40	3.12			●	
i40 CW	7.11			●	
ix20	11.10			●	
Lantra SW	9.98				●
Matrix	6.01				●
Santa Fe	9.12			●	
INNOCENTI					
990	86				●
A 40 S	89		●	●	●
Mini De Tomaso Turbo	89		●	●	●
Minidiesel	86				●
JAGUAR					
XJ	75		●	●	
JEEP					
Cherokee	4.97	4.00			●
Wrangler	11.96	4.07	●	●	
KIA					
Carens	7.02	9.06			●
Sorento	7.02	11.09			●
Venga	2.10			●	
LADA					
1200-1600	72		●	●	
Niva	78		●	●	

LANCIA					
112	78		●	●	
Y10	85	92			●
LAND ROVER					
1200-1600	72		●		
88	6.82	9.83	●	●	●
109	6.82	9.83	●	●	●
MAZDA					
2	10.07			●	
626 SW	2.98				●
323	77	80	●	●	
616	77	80	●	●	
808	77	80	●	●	
818	77	80	●	●	
RX 2	77	80	●	●	
RX 3	77	80	●	●	
RX 4	77	80	●	●	
Premacy	7.99				●
MERCEDES BENZ					
A Class (W168)	7.97	10.04			●
MITSUBISHI					
Colt	71	78	●	●	
Colt	95	4.04			●
Galant	71	77	●	●	
Lancer	71		●	●	
Space Gear	5.95				●
Space Star	6.98	12.04			●
Space Star	1.13			●	
NISSAN					
Almera	10.95	3.00			●
Juke	6.10			●	
Micra	5.10			●	
Note	3.06	9.13		●	
Patrol	89				●
Patrol GR	5.98				●
Pixo	6.09			●	
Sunny	85	89			●
OPEL					
Agila	4.00	9.07			●
Combo	10.01				●
Corsa	82	12.96			●
Corsa (5dr)	12.96	9.00			●
Frontera	11.98				●
Mokka	6.12			●	
Omega Sport Wagon	97				●
Omega	87	94			●
Vectra Caravan	97	11.03			●
PEUGEOT					
104	72	81	●	●	●
204	71	81	●	●	
304	71	81	●	●	
PORSCHE					
911	93	9.97	●	●	
RENAULT					
R 10	69		●	●	
R 16	65	79	●	●	
R 8	63		●	●	
Captur	3.13			●	
Clio Grand Tour IV	11.12			●	
Clio IV	11.12			●	
Zoe	6.12			●	

ROLLS ROYCE					
Corniche	71	86	●	●	
Silver-Shadow	65		●	●	
SEAT					
124	72		●	●	
124 Sport			●	●	
128 Sport	77	79	●	●	
131	75	81	●	●	●
132	73	83	●	●	
133	74		●	●	●
850	74		●	●	
1430	68	72	●	●	
1500	65		●	●	
Fura	81			●	●
Ibiza II	92	4.99			●
Ibiza III	5.99	3.02			●
Ibiza IV	3.02	1.06			●
Marbella	83				●
Panda	10.80	9.03			●
Ritmo		83	●	●	●
Ronda	82	83	●	●	●
SKODA					
Octavia Combi	7.98	1.05			●
SSANGYONG					
Kyron	5.05				●
Musso	95				●
Rexton	7.02				●
SUBARU					
R1	11.06			●	
SUZUKI					
Alto	96	12.08			●
Alto	1.09			●	
Samurai (Hard top)	81				●
SX4	6.06			●	
Vitara JHT	90				●
Wagon R+	5.00				●
TALBOT					
1100	75		●	●	
1100-1200	75		●	●	
Rancho	77		●	●	
TATA					
Safari	8.98				●
TOYOTA					
Auris	10.12			●	
Auris SW Sports	6.13			●	
Corolla Sedan	5.07		●	●	
Corolla Familiar	98	1.02			●
Hilux	2.02	8.05		●	●
Land Cruiser	90	2.03			●
Picnic	2.99			●	
Rav-4	6.94	00			●
Urban Cruiser	4.09			●	
Yaris	4.99	9.11		●	
VAUXHALL (UK)					
Agila	4.00	9.07			●
Combo	3.02				●
Corsa (5dr)	12.96	9.00			●
Frontera	11.98				●
Mokka	6.12			●	
Omega Sport Wagon	97				●

● = *montar con KIT 133 - mount with KIT 133 - monter avec le KIT 133 - mit KIT 133 montieren - montare con KIT 133 - montar com KIT 133*
■ = *montar con KIT 136 - mount with KIT 136 - monter avec le KIT 136 - mit KIT 136 montieren - montare con KIT 136 - montar com KIT 136*

Vectra Estate	97	11.03			●
VOLKSWAGEN					
Golf III	11.91	8.97			●
Golf IV	8.97	02			●
VOLVO					
V 90	96				●
CITROËN					
Berlingo van	9.96	4.08			●
MERCEDES BENZ					
Viano (W639)	9.03	2.05			●

380 mm 15" DVF 38

CHEVROLET					
Aveo	3.11			●	
Spark	3.10			●	
FIAT					
500 L	10.07			●	
Linea	6.07			●	
Punto	10.05			●	
FORD					
Fiesta (3/5dr)	10.08			●	
GALLOPER					
Super Exceed	8.98				●
HONDA					
Accord (4dr)	3.03	2.06		●	
Accord	2.06	7.08		●	
Accord Tourer	3.03	7.08		●	
Civic	9.01	1.06		●	
Jazz	4.02	7.08		●	
ISUZU					
Trooper	4.00				●
JEEP					
Wrangler	4.07		●	●	
Wrangler Limited	4.07		●	●	
KIA					
Pride	10.96				●
LANCIA					
Ypsilon	5.11			●	
MERCEDES BENZ					
G Class (W463)	8.93				●
NISSAN					
Qashqai / Qashqai +2	2.07			●	
X-Trail	7.01	6.07		●	
RENAULT					
Kangoo (5dr)	11.97	2.08			●
SUBARU					
Impreza SW	12.00				●
Legacy	91	94			●
Legacy SW	12.98	8.03			●
Outback	3.99	8.03			●
SUZUKI					
Baleno	95				●
Grand Vitara	11.98	9.05			●
Vitara V	90				●
TATA					
Indica Vista	6.10			●	
Indigo SW	1.03			●	

VOLKSWAGEN					
Fox	6.05			●	
Golf III Variant	7.93	4.99			●
Golf IV Variant	5.99	02			●
Passat Variant	97	1.01			●

400 mm 16" DVF 40

ALFA ROMEO					
33	84	92			●
33 Sport Wagon	83				●
147	1.06			●	
Alfasud	72	83	●	●	
Alfasud Sprint	83		●	●	
Alfetta	81		●	●	
Giulietta	77	85	●	●	
GTV	74	87	●	●	
Mito	9.08			●	
Spider	71	4.95	●	●	
AUDI					
50	74		●	●	
80	83				●
A 3	9.96	5.03			●
A 4	97	11.00			●
A 4 Avant	97	01			●
A 6 Avant	12.97	8.01			●
RS 2 Avant	5.95				●
BMW					
Serie 6 Cabrio	6.11			●	
Serie 6 Coupe	6.11			●	
Serie 6 Gran Coupe	6.11			●	
CADILLAC					
Escalade	10.06				●
SRX	1.09			●	
CHEVROLET					
Alero	3.99			●	
Aveo (3/5dr)	4.08	3.11		●	
Aveo (4dr)	1.06	3.11		●	
Blazer trail	9.01				●
Captiva	7.06			●	
Tahoe	12.99				●
Trail Blazer	9.01				●
CITROËN					
AX	86				●
Berlingo Combi	4.08			●	
C3	11.09			●	
C3 Picasso	2.09			●	
C-Elysée	11.12			●	
CX	74				●
DS3	11.09			●	
DS3 Cabrio	3.13			●	
Evasión	95				●
GS / GSA / GSX	75		●	●	●
Saxo	4.96				●
Xantia II Familiar	9.97				●
DACIA					
Dokker	11.12			●	
Lodgy	3.12			●	
DAEWOO					
Kalos	11.02			●	
Matiz	9.98			●	
Nubira Wagon	5.97	11.04			●
Tacuma	10.00				●
DAIHATSU					
F 20 Taft	78		●	●	
Charade	93				●

DODGE					
Viper	7.97	1.03	●	●	
FERRARI					
California	7.08			●	
FF	6.11			●	
FIAT					
Argenta	81				
Idea	1.04			●	
Marea	1.97			●	
Panda	9.03	2.12		●	
Punto	94	11.99		●	
Regata	84		●	●	
Ritmo	78		●	●	●
Strada	81	99	●	●	●
Tipo	88	92			●
Ulysse	95	11.02			●
FORD					
Fiesta (3/5dr)	11.01	10.08		●	
Focus	11.98	11.04			●
Fusion	11.02			●	
Kuga	3.08	3.13		●	
Ranger	4.11			●	
GALLOPER					
Exceed	5.98		●	●	
Santamo	11.98				●
HONDA					
Civic	86	88	●	●	
Civic (3dr)	1.95	9.01			●
CR-V (III)	1.07	10.12		●	
CR-V (IV)	10.12			●	
Logo	3.99			●	
Quintet	81		●	●	
S2000	10.99		●		
HYUNDAI					
Accent	7.06			●	
Atos	2.98			●	
H-1	10.97				●
i10	1.08			●	
i20	9.08			●	
Matrix	6.01			●	
Pony	77	90	●	●	
Terracan	2.02				●
Trajet	3.00				●
Tucson	11.04			●	
ISUZU					
Trooper	10.87	12.91			●
KIA					
Carens	9.06	4.13		●	
Cerato	6.04			●	
Optima	3.12			●	
Picanto	5.11			●	
Picanto	4.04	5.11		●	
Rio	3.05			●	
Sportage	95	9.04			●
Sportage	9.04	7.10		●	
LADA					
Kalina (1118)	10.04			●	
Kalina (1119)	10.04			●	
LANCIA					
Musa	10.04			●	
Ypsilon	2.96	5.11		●	
Z	4.95				●
LAND ROVER					
Discovery	10.04				●
Range Rover Sport	6.05	8.13			●
MAZDA					
2	4.03	9.07		●	
5	2.05			●	

● = *montar con KIT 133 - mount with KIT 133 - monter avec le KIT 133 - mit KIT 133 montieren - montare con KIT 133 - montar com KIT 133*
■ = *montar con KIT 136 - mount with KIT 136 - monter avec le KIT 136 - mit KIT 136 montieren - montare con KIT 136 - montar com KIT 136*

6	8.07	1.13		●	
6 SW	8.07	1.13		●	
323	93	98			●
CX-7	10.07			●	
Demio	8.98			●	
MPV	6.97				●
Premacy	7.99			●	
MERCEDES BENZ					
E Class SW (S210)	96	3.03			●
G Class (W460)	80	8.93	●	●	●
G Class (W463)	8.93		●	●	
Vaneo	11.01	04			●
MITSUBISHI					
Galant	77	79	●	●	
Galant Wagon	93				●
Lancer Sportback	6.08			●	
Montero / Pajero	86	90	●	●	
Montero / Pajero	9.97	2.07			●
Montero IO	10.99				●
Montero Sport	11.98				●
Space Runner	95				●
NISSAN					
120 - 160	78	82	●	●	
Almera (3/5dr)	3.00			●	
Almera(4dr)	7.00			●	
Leaf	11.10			●	
Micra	5.98	2.03			●
Murano	10.08			●	
Note	9.13			●	
NV200	2.10			●	
Patrol	79	86	●	●	
Prairie	85		●	●	●
Primastar	9.02				●
Primera Sport Wagon	98	4.02			●
Serena	10.92				●
Stanza	81		●	●	
Sunny	78	82	●	●	
Vanette	81	86	●	●	
X-Trail	7.01	6.07			●
X-Trail	6.07			●	
OPEL					
Adam	10.12			●	
Agila	9.07			●	
Antara	5.06			●	
Combo	10.01			●	
Corsa (3dr)	12.96	9.00			●
Corsa	7.06			●	
GT	6.07		●		
GT	9.68	8.73	●	●	
Kadett	79	84	●	●	●
Kadett	85				●
Monterey	93				●
Omega	95				●
Sintra	97				●
PEUGEOT					
106	91	94			●
106	95				●
205	83				●
206	10.98			●	
206 CC	01			●	
206+	1.09			●	
207	2.06			●	
207 CC	1.07			●	
207 SW	6.07			●	
208	3.12			●	
305	78		●	●	
504	68	80	●	●	
504	81		●	●	
806	95				●
2008	5.13			●	
Partner	9.96	4.08			●
Partner van	4.08			●	

Partner Tepee	4.08			●	
PORSCHE					
911	93	9.97			●
RENAULT					
Alpine A110	71		●	●	
Clio Grand Tour	2.08	11.12		●	
Clio I	95	4.98			●
Clio III	9.05	11.12		●	
Fluence	2.10			●	
Laguna Coupe	3.08			●	
Laguna III	10.07			●	
Laguna III Grand Tour	10.07			●	
Latitude	2.11			●	
Mégane (5dr)	1.09			●	
Mégane CC	6.10			●	
Mégane Coupe	1.09			●	
R 5	85				●
R 9	81		●	●	
R 11	83		●	●	
R 14	76		●	●	●
R 18	78		●	●	
R 18 Break	78		●	●	●
Scénic	1.97	6.03		●	
Twingo	3.07			●	
Wind	7.10			●	
SAAB					
900	78	94	●	●	
SANTANA					
Anibal	10.02		●		
SEAT					
131	81	84	●	●	●
Ibiza V (5dr)	3.08			●	
Ibiza V SC	3.08			●	
Ibiza V ST	3.10			●	
Málaga	85	88	●	●	
Marbella	83		●		
Panda	10.80	9.03	●		
Ritmo	84		●	●	●
Ronda	84		●	●	●
SKODA					
105	76		●	●	
120	76		●	●	
120 - 130	86		●	●	
136 Rapid	81		●	●	
Garde Coupe	81		●	●	
Favorit	90				●
Felicia	4.95				●
Forman	91				●
SSANGYONG					
Korando	11.10			●	
SUBARU					
Forester	8.97	1.08			●
Impreza	12.00			●	
Impreza SW	93	12.00			●
Impreza SW	12.00			●	
Justy	89			●	●
Justy	1.07			●	
Legacy	95	10.98			●
XV	3.12			●	
SUZUKI					
Alto	96	12.08		●	
Jimny	11.98			●	
Splash	1.08			●	
Swift	89	4.05			●
TALBOT					
Horizon	78		●	●	●
Samba	81		●	●	
Solara	79		●	●	

TOWN LIFE					
Ferrucio			●		
Ginevra			●		
TOYOTA					
Auris	10.06	10.12		●	
Avensis	4.03			●	
Avensis (5dr)	4.03	1.09		●	
Avensis Cross Sport	1.09			●	
Avensis Verso	8.01			●	
Avensis Wagon	4.03	1.09		●	
Corolla (3dr)	97	1.02			●
Corolla	92	97			●
Corolla Verso	1.02			●	
Corona	75	79	●	●	
Hilux	2.02	8.05	●		
Land Cruiser 100	1.98				●
Picnic	2.99				●
Prius II	8.03	3.09		●	●
Prius III	3.09			●	●
Rav-4	11.05			●	
Starlet	96				●
Verso	4.09			●	
VAUXHALL (UK)					
Adam	10.12			●	
Agila	9.07			●	
Antara	5.06			●	
Combo	3.02			●	
Corsa (3dr)	12.96	9.00			●
Corsa	7.06			●	
GT	6.07		●		
Monterey	93				●
Omega	95				●
Sintra	97				●
VOLKSWAGEN					
Derby	77		●	●	
Golf I	74	83	●	●	●
Golf II	84	10.91			●
Jetta	79	88	●	●	
Passat II	80	88			●
Polo IV	6.09			●	
Scirocco	81	9.08			●
VOLVO					
242, 244, 262, 264, 265	74		●	●	
240, 245	83		●	●	
850 SW	10.93	96			●
V 40	96	3.12			●
V 70	96	3.00			●

CHEVROLET					
Trans Sport	2.98				●
CHRYSLER					
Grand Voyager	1.96	10.07			●
PT Cruiser	6.00				●
Voyager	1.96				●
CITROËN					
Berlingo	9.96	4.08			●
Berlingo van	4.08			●	
FORD					
Tourneo Custom	5.11				●
NISSAN					
Vanette Cargo	1.95				●
PEUGEOT					
Expert	95	1.07			●
PIAGGIO					
Porter	95		●	●	

● = *montar con KIT 133 - mount with KIT 133 - monter avec le KIT 133 - mit KIT 133 montieren - montare con KIT 133 - montar com KIT 133*
■ = *montar con KIT 136 - mount with KIT 136 - monter avec le KIT 136 - mit KIT 136 montieren - montare con KIT 136 - montar com KIT 136*

SEAT					
Terra	12.86		●		
Trans	82	12.86	●		
SUZUKI					
Carry	5.99		●	●	
VOLKSWAGEN					
California	95	7.03			●
Caravelle	95	7.03			●
Transporter	95	7.03			●

430 mm 17" DVF 43

DODGE					
Caliber	6.06			●	
FIAT					
Bravo	4.07			●	
Croma	6.05			●	
FORD					
Focus	11.04	4.11		●	
Focus (4dr)	4.05	4.11		●	
Focus CC	10.06			●	
Focus Wagon	11.04	5.11		●	
HONDA					
HRV	3.99			●	
Insight	4.09			●	
HYUNDAI					
ix35	1.10			●	
INFINITI					
G37 Cabrio	9.10			●	
G37 Coupe	10.08			●	
G37 Sedán	10.08			●	
LANCIA					
Delta	9.08			●	
LEXUS					
LS	4.06			●	
MASERATI					
Gran Cabrio	6.10			●	
Gran Turismo	8.08			●	
Quattroporte	3.04			●	
MERCEDES BENZ					
M Class (W163)	3.98	6.05			●
MITSUBISHI					
Colt	95	4.04		●	
Lancer	1.08			●	
NISSAN					
Máxima	95			●	
SUZUKI					
Swift	10.10			●	
TOYOTA					
4 Runner	93		●	●	

450 mm 18" DVF 45

ALFA ROMEO					
6	79		●	●	
33	84	92	●	●	
33 Sport Wagon	83		●	●	
75	86		●	●	
90	84		●	●	
159	9.05			●	
159 Sportwagon	4.06			●	
Brera	1.06			●	
Giulietta	4.10			●	
Spider	9.06			●	
ASTON MARTIN					
Cignet	4.11			●	
AUDI					
100	82	88			●
A 6 Avant	6.94	12.97			●
Coupe GT	80	83	●	●	●
Quattro	80	83	●	●	●
AUTOBIANCHI					
Y 10	85	92	●		
BMW					
Compact (E46)	6.01				●
M 6	84		●	●	
Serie 1 (F20, F21)	6.11			●	
Serie 3 (E21)	79	83	●	●	
Serie 3 Cabrio (E93)	3.07	10		●	
Serie 3 Coupe (E92)	6.06			●	
Serie 3 Touring (E30)	82	95			●
Serie 5 (E28)	4.79	2.88	●	●	
Serie 5 (F10)	3.10			●	
Serie 5 GT (F07)	10.09			●	
Serie 5 Touring (F11)	9.10			●	
Serie 6 (E24)	79	93	●	●	
Serie 6 Csi	84		●	●	
Serie 7 (E23)	79	86	●	●	
Serie X5	5.00	2.07			●
X1	10.09			●	
CADILLAC					
ATS	2.13			●	
CHEVROLET					
Cruze (4dr)	5.09			●	
Cruze (5dr)	6.11			●	
Cruze SW	8.12			●	
HHR	10.07		●	●	
CHRYSLER					
Le Baron	93		●	●	
Neon	11.94	4.99		●	
Saratoga	93		●	●	
CITROËN					
C2	9.03			●	
C3	5.02	11.09		●	
C5 Break	10.04			●	
Nemo	2.08			●	
Pluriel	5.03			●	
Saxo	4.96			●	
XM	90				●
Xsara	9.97				●
ZX	4.91				●
DAEWOO					
Aranos	95		●	●	
Compact	5.97				●
Lacetti	2.04				●
Nexia	95		●	●	●
DAIHATSU					
Charade	93			●	
Terios	7.06			●	
FERRARI					
599 GTB	6.06			●	
612 Scaglietti	4.04			●	
FIAT					
Dobló Cargo	3.01	2.10		●	
Dobló Panorama	3.01	2.10		●	
Duna	1.87		●	●	
Fiorino	2.08			●	
Palio Weekend	2.98			●	
Punto	11.99	10.05		●	
Stilo	10.01	1.06		●	
Strada	6.99			●	
FORD					
Explorer	95		●	●	
Ranger	6.99	4.11	●	●	
GALLOPER					
Santamo	11.98			●	
HONDA					
Accord Coupe	2.98			●	
Civic	89	92			●
Civic	93	12.94		●	●
Civic (3dr)	1.95	9.01		●	
Civic (5dr)	1.95	9.01		●	●
Civic	2.12			●	
Concerto	91	96	●	●	●
CRX	92				●
Prelude	89	92	●	●	
Prelude	1.97			●	
HYUNDAI					
Accent	1.95	3.03		●	
Accent	3.03	7.06		●	●
Coupe	96			●	
Elantra	6.00			●	
i30	10.07	11.11		●	
i30 CW	10.07	6.12		●	
Lantra	92			●	
Lantra SW	9.98			●	
Pony	90		●	●	
S Coupe	92	96	●	●	
Santa Fe	3.06	9.12		●	
Sonata	92	10.98		●	
Sonata	1.10			●	
Veloster	3.11			●	
INFINITI					
EX	10.08			●	
INNOCENTI					
990	86		●	●	
ISUZU					
Trooper	10.87	12.91	●	●	
JEEP					
Cherokee	4.97	4.00	●	●	
Commander	9.05		●	●	
Wrangler	11.96	4.07			●
KIA					
Carens	7.02	9.06		●	
Carnival	3.99	6.06			●
Carnival	6.06			●	
Cee'd	12.06			●	
Cee'd SW	9.07			●	
Magentis	4.06			●	
Opirus	10.03			●	
Pride	10.96		●	●	
Pro Cee'd	2.08			●	
Rio	9.00	3.05		●	
Shuma	98				●
Sorento	7.02	11.09		●	
Sportage	7.10			●	
LANCIA					
Delta	85	92	●	●	●
Gamma	85		●	●	
Prisma	85		●	●	
Y 10	85	92	●		
LAND ROVER					
Discovery	90	12.97	●	●	
LEXUS					
CT	12.10			●	
GS	4.05			●	

● = *montar con KIT 133 - mount with KIT 133 - monter avec le KIT 133 - mit KIT 133 montieren - montare con KIT 133 - montar com KIT 133*
■ = *montar con KIT 136 - mount with KIT 136 - monter avec le KIT 136 - mit KIT 136 montieren - montare con KIT 136 - montar com KIT 136*

IS	6.13			●	
MAZDA					
6	6.02	8.07		●	
6	1.13			●	
6 Wagon	11.02	8.07		●	
6 Wagon	1.13			●	
323	86	92	●	●	●
323	93	98		●	
626	86	91	●	●	●
929	86		●	●	
B-2500	6.99		●	●	
CX-5	11.11			●	
MX-3	93			●	
MX-5	93		●	●	
RX-8	7.03			●	
MERCEDES BENZ					
GLK Class (X204)	6.08			●	
V Class	10.96				●
MG					
ZR	6.01		●	●	●
ZS	6.01			●	
MICROCARS					
Zeus			●		
MINI					
Cabrio	7.04		●		
Clubman	10.07		●		
Countryman	6.10		●		
Mini	9.01		●		
Paceman	4.12		●		
MITSUBISHI					
Galant	90			●	
Galant Wagon	93			●	
L200	11.01	11.05		●	
L200	10.09			●	
Lancer EVO VII	2.01			●	
Montero IO	10.99		●		
Outlander	4.03	11.06		●	
Outlander	8.12			●	
Space Gear	5.95			●	
Space Runner	95			●	
Space Star	6.98	12.04		●	
NISSAN					
350 Z	6.03			●	●
350 Z Roadster	6.05			●	
370 Z	6.09			●	●
Almera Tino	8.00			●	
Micra	1.93	4.98		●	●
Micra	5.98	5.10		●	
Patrol	86		●	●	
Patrol GR	2.93	5.98	●	●	
Sunny	89	90			●
Vanette	10.86	1.95	●	●	
OPEL					
Agila	4.00	9.07		●	
Ascona	75		●	●	
Astra	91	97	●	●	●
Astra (5dr)	4.04	12.09		●	
Astra Caravan	92	5.98	●	●	●
Astra GTC	3.05	10.11		●	
Astra Sedán	2.07	6.12		●	
Astra SW	10.04	10.10		●	
Astra TwinTop	5.06			●	
Corsa	82	9.00	●	●	
Corsa	10.00	7.06		●	
Corsa Combo	95		●	●	
Insignia	7.08			●	
Insignia Sports Tourer	7.08			●	
Kadett	85		●	●	
Monza	77		●	●	
Omega	77	86	●	●	

Senator	77	89	●	●	
Tigra	95	9.04	●	●	
Tigra Twin Top	9.04			●	
Vectra	88	89	●	●	
PEUGEOT					
106	91	94	●	●	
106	95			●	
205	83		●	●	
206 SW	5.02			●	
309	86		●	●	●
505	79		●	●	●
604	75		●	●	
1007	6.05			●	
Bipper	2.08			●	
PORSCHE					
928	77		●	●	
RENAULT					
Avantime	9.01			●	
Clio I	90	94	●	●	
Clio II	5.98	9.05		●	
Espace III	98	11.02		●■	
Laguna	1.94	01		●	
Mégane	10.02	1.09		●	
Mégane Cabrio	10.03	6.10		●	
Mégane Grand Tour	9.03	1.09		●	
Mégane Sedan	9.03			●	
Mégane Sport Tourer	1.09			●	
R 5	85		●	●	
Twizy	4.12		●		
ROLLS-ROYCE					
Silver Spirit	81		●	●	
Silver Spur	81		●	●	
ROVER					
25	2.00		●	●	●
45	2.00			●	
2400 / 2600	84		●	●	
3500 / Vanden Plas	85		●	●	
Serie 200	85	2.00	●	●	●
Serie 400	93	96	●	●	●
Serie 400	1.97	2.00		●	●
SAAB					
900 Turbo 16 Cabriolet	86	94	●	●	
SANTANA					
Anibal	10.02			●	
SEAT					
Córdoba	1.94	02		●	
Córdoba Vario	99			●	
Ibiza I	84	88	●		●
Ibiza I	89	92			●
Málaga	89		●	●	
SKODA					
Favorit	90	92	●	●	
Forman	91	95	●	●	
Superb	3.08			●	
Superb Combi	10.09			●	
SMART					
Forfour	4.04			●	
Roadster Cabrio	4.03			●	
Roadster Coupe	4.03			●	
SSANGYONG					
Korando	96	11.10	●	●	
Musso	98			●	
Musso Sports Pick-up	2.04			●	
Rodius	5.05			●	
SUBARU					
Forester	1.08			●	
Impreza	93	12.00		●	
Impreza SW	93	12.00		●	
Justy	89		●		

Legacy	91	94		●	
Legacy	8.03	9.09		●	
Legacy SW	8.03	9.09		●	
Outback	8.03	9.09		●	
SVX	93				●
SUZUKI					
Baleno	95			●	
Baleno SW	95			●	
Ignis	10.00			●	
Jimny	11.98		●		
Liana	7.01			●	
Liana Sedán	5.02			●	
Swift	89	10.10		●	
Vitara JHT	90		●	●	
Vitara V	90		●	●	
Wagon R+	6.98			●	
TESLA					
Model S	1.13			●	
TOYOTA					
Avensis	1.98	4.03		●	
Carina E (5dr)	4.92			●	
Celica	90	94		●	
Corolla	92			●	
Corolla Familiar	98	1.02		●	
Hilux	1.97	2.02	●	●	
iQ	4.09			●	
Land Cruiser	90	96	●	●	
Land Cruiser	2.03	1.08			●
Paseo	9.96			●	
Prius+	3.12			●	
Rav-4	6.94	00		●	
Starlet	96			●	
VAUXHALL (UK)					
Agila	4.00	9.07		●	
Astra	91	97	●	●	●
Astra (5dr)	4.04	12.09		●	
Astra Estate	92	5.98	●	●	●
Astra Estate	10.04	10.10		●	
Astra GTC	3.05	10.11		●	
Astra Saloon	2.07	6.12		●	
Astra TwinTop	5.06			●	
Corsa	12.96	9.00	●	●	
Corsa	10.00	7.06		●	
Insignia	7.08			●	
Insignia Sports Tourer	7.08			●	
Tigra	95	9.04	●	●	
Tigra Twin Top	9.04			●	
VOLKSWAGEN					
Corrado	89	92			●
Golf II	84	10.91	●	●	
Jetta	89	10.05	●	●	
Lupo	5.01			●	
Passat CC	6.08	11.11		●	
Passat II	80	88	●	●	
Polo III	10.01	1.06		●	
Santana	81		●	●	
Touran	6.09			●	
VOLVO					
340, 343, 345, 360	82		●	●	
740, 760	83	88	●	●	
760	82		●	●	
CHRYSLER					
Voyager	91	12.95		●	
FIAT					
Fiorino	1.88	5.01	●		
KIA					
Pregio	10.96			●	●

● = *montar con KIT 133 - mount with KIT 133 - monter avec le KIT 133 - mit KIT 133 montieren - montare con KIT 133 - montar com KIT 133*
■ = *montar con KIT 136 - mount with KIT 136 - monter avec le KIT 136 - mit KIT 136 montieren - montare con KIT 136 - montar com KIT 136*

RENAULT					
Express	92		●	●	
SEAT					
Inca	11.95			●	●
VOLKSWAGEN					
Caddy	11.95			●	

480 mm 19" DVF 48

ALFA ROMEO					
33	93		●	●	
145	95			●	
146	95			●	
155	4.92			●	
166	10.98			●	
AUDI					
A 3	9.96	4.12		●	
A 3 Cabrio	4.08			●	
A 3 Sportback	10.04	9.12		●	
Coupe GT	83	89			●
Quattro	83				●
BMW					
Serie 3 (E90)	1.05	10.11		●	
Serie 3 (F30)	10.11			●	
Serie 3 GT	2.13			●	
Serie 3 Touring (E91)	9.05	6.12		●	
Serie 3 Touring (F31)	6.12			●	
Serie 7 (E66)	7.08			●	
CADILLAC					
CTS	1.08			●	
CTS Wagon	1.08			●	
CHEVROLET					
Malibu	1.12			●	
Nubira SW	11.04			●	
Orlando	12.10			●	
CHRYSLER					
Neon	5.99			●	
CITROËN					
BX	83				●
C5	3.01	10.04		●	
C5 Break	6.01	10.04		●	
Visa	78		●		●
Visa 2	78		●		●
Xantia II	9.97			●	
Xantia II Familiar	9.97			●	
DAEWOO					
Lacetti	2.04			●	
Lanos	6.97		●	●	●
Leganza	10.97			●	
Nubira	6.03			●	
Tacuma	10.00			●	
DAIHATSU					
Charade	93		●		
DODGE					
Journey	06.08			●	
Nitro	6.07		●	●	
FIAT					
Barchetta	5.95		●	●	
Brava	95			●	
Bravo	9.95	4.07		●	
Cinquecento	92	5.95	●	●	
Coupe	5.94			●	●
Croma	86	94			●
Freemont	8.11			●	
Seicento	4.98		●	●	
Stilo	1.06			●	
Stilo Multiwagon	3.03			●	
Tipo	88	92	●	●	
Uno	83		●		
FORD					
C-MAX	2.07	12.10		●	
Fiesta	96	11.01	●	●	
Focus	11.98	11.04		●	
Focus C-MAX	11.03	2.07		●	
Focus Wagon	11.98	11.04		●	
Maverick	2.01		●	●	
Mondeo (4/5dr/Sp.break)	3.07			●	
Puma	10.97		●	●	●
Streetka	5.03		●	●	
GALLOPER					
Super Exceed	8.98		●	●	
HONDA					
Accord	11.98	3.03		●	
Accord Coupe	93	2.98		●	
Civic	89	92	●	●	
Civic (4dr)	9.01	1.06		●	
Civic	2.12				●
Civic Coupe	9.01			●	
Civic IMA	1.04	1.06		●	
CR-V (I)	11.97	4.02	●	●	
CRX	92			●	
FR-V	11.04			●	
Legend	93			●	
Prelude	93	12.96		●	●
Prelude	1.97				●
HYUNDAI					
Accent	1.95	3.03			●
INFINITI					
FX	10.08			●	
M	3.10			●	
ISUZU					
D-MAX (Rodeo)	5.02			●	
JAGUAR					
S-Type	6.01			●	
XF	3.08			●	
XF Sportbrake	9.12			●	
XJ	1.10			●	
X-Type	6.01			●	
JEEP					
Cherokee	4.00		●	●	
KIA					
Carens	8.99	7.02		●	
Clarus	10.96			●	
Sephia I	95	97		●	
Sephia II	97			●	
Shuma	98			●	
LANCIA					
Dedra	90			●	
Delta	93	9.08		●	
LAND ROVER					
Range Rover	95	3.02			●
LEXUS					
IS	4.99	12.05		●	
IS Sport Cross	10.01			●	
MAZDA					
3	11.03			●	
323 F (5dr/Sedan)	98			●	
626 (Hatchback/Sedan)	5.97			●	
626 SW	2.98			●	
Tribute	3.00		●	●	
MERCEDES BENZ					
A Class (W176)	6.12			●	
B Class (W246)	11.11			●	
CLA Class (C117)	2.13			●	
MINI					
Cabrio	7.04			●	
Clubman	10.07			●	
Mini	9.01			●	
MITSUBISHI					
Galant	90	92	●		
L200	10.96	11.01	●	●	
L200	11.01	11.05	●		
L200	11.05	10.09		●	
Montero / Pajero	91	4.00	●	●	
Montero IO	10.99			●	
NISSAN					
100 NX	91			●	
200 SX	86	94		●	●
200 SX	95				●
300 ZX	86	94		●	●
Almera	10.95	3.00		●	
Bluebird	89		●	●	●
GT-R	2.09			●	
Navara	10.04			●	
NP300	5.08		●	●	
Pathfinder	3.05			●	
Patrol GR	5.98		●		
Pick-up	1.97	10.04	●	●	
Primera	91	95		●	
Primera	4.02			●	
Primera Sport Wagon	4.02			●	
Sunny	85	89		●	
Sunny SW	86			●	●
Terrano	89		●	●	
OPEL					
Ascona	75				●
Astra (3/5dr)	97	4.04		●	
Astra Caravan	5.98	10.04		●	
Astra Coupe	10.00	3.05		●	
Astra Sedán	9.98	2.07		●	
Calibra	90		●	●	●
Frontera	92		●	●	
Monza	77				●
Omega	87	94	●	●	
Omega	95			●	
Omega Sport Wagon	97			●	
Senator	89		●	●	
Signum	4.03			●	
Vectra	89	4.02	●	●	●
Vectra	4.02			●	
Vectra Caravan	97	11.03	●	●	
Vectra Caravan	11.03			●	
PORSCHE					
924	75		●	●	●
928	85		●	●	
928 GTS	93		●	●	
RENAULT					
Koleos	9.08			●	
R 11	83				●
R 19	6.88				●
R 21 (5dr)	5.89				●
ROVER					
Serie 800	89	4.92	●	●	
SEAT					
Arosa	6.97			●	
Córdoba	12.02			●	
Ibiza III	5.99	3.02		●	
Ibiza IV	3.02	3.08		●	
León	10.99	7.05		●	
Toledo I	12.98	11.04		●	
SKODA					
Fabia (4dr/5dr/Combi)	12.99	3.07		●	

● = *montar con KIT 133 - mount with KIT 133 - monter avec le KIT 133 - mit KIT 133 montieren - montare con KIT 133 - montar com KIT 133*
■ = *montar con KIT 136 - mount with KIT 136 - monter avec le KIT 136 - mit KIT 136 montieren - montare con KIT 136 - montar com KIT 136*

Octavia	96	3.13		●	
Octavia Combi	7.98	3.13		●	
Yeti	5.09			●	
SSANGYONG					
Actyon	10.06			●	
Actyon Sports	4.07			●	
Family			●	●	
Kyron	5.05			●	
SUBARU					
Forester	8.97	1.08		●	
Legacy	95	10.98		●	
Legacy	9.09			●	
Legacy SW	9.09			●	
Outback	9.09			●	
SUZUKI					
Alto	96	12.08	●		
Grand Vitara	11.98		●	●	
Ignis	10.00		●		
TALBOT					
Tagora	82		●	●	
TOYOTA					
Camry	10.92			●	
Celica	94	1.00		●	
Hilux	8.05			●	
Land Cruiser	96	2.03	●	●	
MR2	5.00			●	
Rav-4	00	11.05		●	
VAUXHALL (UK)					
Astra (3/5dr)	97	4.04		●	
Astra Coupe	10.00	3.05		●	
Astra Estate	5.98	10.04		●	
Astra Saloon	9.98	2.07		●	
Calibra	90		●	●	●
Frontera	11.98		●	●	
Omega	95			●	
Omega Sport Wagon	97			●	
Signum	4.03			●	
Vectra	12.96	4.02	●	●	●
Vectra	4.02			●	
Vectra Estate	97	11.03	●	●	
Vectra Estate	11.03			●	
VOLKSWAGEN					
Bora	1.99			●	
Corrado	89	92	●	●	
Corrado	93		●	●	●
Eos	4.06			●	
Golf III	11.91	8.97		●	
Golf III Variant	7.93	4.99		●	
Golf IV	8.97	11.03		●	
Golf IV Variant	5.99	6.07		●	
Golf V	11.03	10.08		●	
Golf V Variant	6.07	7.09		●	
Golf VI	10.08	11.12		●	
Golf VI Variant	7.09	3.13		●	
Jetta	10.05	6.10		●	
Lupo	11.98	02		●	
Passat Variant VI	10.05	8.10		●	
Passat Variant VII	8.10	7.11		●	
Passat VI	3.05	8.10		●	
Passat VII	8.10	7.11		●	
Polo II	95	10.01	●	●	
Polo III	1.06	6.09		●	
Scirocco	81	9.08	●	●	
Scirocco	9.08			●	
Vento	4.92			●	
VOLVO					
C 70	1.06			●	
V 40	3.12			●	

CITROËN				
C15	84		●	
VOLKSWAGEN				
LT	11.82	4.96	●	●

500 mm 20" DVF 50

ALFA ROMEO				
SZ Zagato	89		●	●
ASTON MARTIN				
DB9	1.04			●
DBS	9.07			●
Rapide	3.10			●
AUDI				
90	85		●	●
100	82	88	●	●
200	83		●	●
A 4	1.95	11.00		●
A 4 Avant	95	01		●
Coupe GT	83	89	●	●
Quattro	83		●	●
S 2	91		●	●
S 4	91		●	●
V 8	91		●	●
AUSTIN				
Maestro	84		●	●
Montego	84		●	●
BMW				
Compact (E46)	6.01			●
M 3 (E30)	86	4.91	●	●
M 3 (E36)	4.91	00		●
M 3 Cabrio (E36)	95			●
Serie 1 (E81, E87)	9.04	6.11	●	●
Serie 1 Cabrio (E88)	3.08		●	●
Serie 1 Coupe (E82)	10.07		●	●
Serie 3 (E30)	83	91	●	●
Serie 3 (E36)	91	2.98		●
Serie 3 (E46)	2.98	1.05		●
Serie 3 Compact (E36)	95	6.01	●	●
Serie 3 Coupe (E46)	4.99	6.06		●
Serie 3 Touring (E30)	82	95	●	●
Serie 3 Touring (E36)	95	00		●
Serie 3 Touring (E46)	00	9.05		●
Serie X5	2.07			●
X3	1.04			●
X6	5.08			●
Z1	89		●	●
Z3	10.95		●	●
Z3 Coupe	7.97		●	●
Z4	4.03	5.09		●
CHATENET				
Stella	4		●	
CHEVROLET				
Blazer	2.98		●	●
Epica	6.06			●
CHRYSLER				
Crossfire	11.03		●	
Neon	11.94	4.99	●	
PT Cruiser Convertible	5.04		●	
CITROËN				
BX	83		●	●
Evasión	95			●
Saxo	4.96		●	
Xantia	4.93	8.97		●
Xsara	9.97			●

DACIA					
Duster	4.10		●	●	
Logan	6.05		●	●	
Logan Break	2.07	3.13	●	●	
Logan MCV	3.13			●	
Sandero	6.08	4.13	●	●	
Sandero	4.13			●	
DAEWOO					
Compact	5.97		●	●	
Evanda	12.02			●	
Nubira	9.97	6.03	●	●	
Nubira Wagon	5.97	11.04	●	●	
DODGE					
Charger	1.12			●	
FERRARI					
Mondial 8	80		●	●	
FIAT					
Croma	86	94	●	●	
Panda	2.12		●		
Ulysse	95	11.02		●	
FORD					
Cougar	11.98			●	
Mondeo	3.93	11.00	●	●	
Mondeo	11.00	3.07		●	
Mondeo Wagon	3.93	11.00	●	●	
Mondeo Wagon	11.00	3.07		●	
Probe	95		●	●	●
Tourneo Connect	6.02	13		●	
HONDA					
Accord	91	10.98		●	
Civic	93	9.01	●		
CR-V (II)	4.02	11.06		●	
CRX	92		●		
CR-Z	6.10			●	
HRV	3.99		●		
Jazz	4.02	7.08	●		
Legend	93		●		
Logo	3.99		●		
NSX	95		●	●	
Prelude	93		●		
S2000	10.99			●	
HYUNDAI					
Accent	1.95	7.06	●		
Atos	2.98		●		
Coupe	2.02				●
Elantra	6.00		●		●
Genesis	1.08			●	
H-1	10.97			●	
ix55	9.08			●	
Lantra	92		●		
Lantra SW	9.98		●		
Santa Fe	2.01	3.06		●	
Sonata	92	10.98	●		
Sonata	11.98	1.10		●	
Terracan	2.02			●	
XG	2.99			●	
ISUZU					
Trooper	4.00		●	●	
JEEP					
Cherokee	91	3.97	●	●	
Compass	9.06			●	
Gran Cherokee	93	3.97	●	●	
KIA					
Magentis	5.01	4.06		●	
Sorento	11.09			●	
Soul	2.09			●	
Sportage	95	9.04	●	●	

● = *montar con KIT 133 - mount with KIT 133 - monter avec le KIT 133 - mit KIT 133 montieren - montare con KIT 133 - montar com KIT 133*
■ = *montar con KIT 136 - mount with KIT 136 - monter avec le KIT 136 - mit KIT 136 montieren - montare con KIT 136 - montar com KIT 136*

LADA					
Priora (2170)	10.04		●	●	●
Priora (2172)	10.04		●	●	●
LANCIA					
Dedra	90		●		
K	95			●	
Thema	85	94	●	●	
Thema	9.11			●	
Z	4.95			●	
LAND ROVER					
Freelander 2	2.06			●	
Range Rover Evoque	6.11			●	
LEXUS					
GS	8.97	4.05		●	
IS	12.05	6.13		●	
SC	8.01			●	
MASERATI					
228	89		●	●	
420-430	89		●	●	
Ghibli	93		●	●	
Plus	89		●	●	
Quattroporte	95	3.04		●	
Shamal	93		●	●	
Spider	93		●	●	
MAZDA					
6 (5dr)	6.02	1.13			●
626	4.92	97		●	
626 (Hatchback/Sedan)	5.97				●
Demio	8.98		●		
MPV	6.97	9.99		●	
MX6	93		●	●	
RX 7 Cabrio	93		●	●	●
RX-8	7.03		●		
Xedos	93			●	
Xedos 9	7.93		●	●	
MERCEDES BENZ					
200, 300 (W123)	76	85	●	●	
200, 300 CE (C123)	77	85	●	●	
C Class (W203)	5.00	4.04		●	
C Class Sp.cp. (CL203)	3.01	4.04		●	
MG					
TF	6.01		●	●	
ZS	6.01		●		
MINI					
Countryman	6.10			●	
Paceman	4.12			●	
Roadster	2.12		●		
MITSUBISHI					
3000 GT	93			●	
Carisma	10.96			●	●
Colt	95	4.04	●		
Eclipse	93		●	●	
Montero / Pajero	4.00	2.07	●	●	
Montero / Pajero	2.07			●	
Montero Sport	11.98		●	●	
NISSAN					
100 NX	91				●
200 SX	86	94	●		
300 ZX	86	94	●		
350 Z	6.03		●		
350Z Roadster	6.05		●		
Almera Tino	8.00				●
Cherry	85		●	●	
Cube	3.10		●	●	
Máxima	89	94		●	
Micra	1.93	2.03	●		
Patrol GR	5.98			●	
Primastar	9.02			●	

Primera	96	4.02		●	
Primera Sport Wagon	98	4.02		●	
Sunny	85	89	●		
Sunny	89	90	●	●	
Sunny SW	86		●		
Terrano II	2.93			●	
OPEL					
Agila	4.00	9.07	●		
Astra (3/5dr)	97	4.04	●		
Astra Caravan	5.98	10.04	●		
Astra Coupe	10.00	3.05	●		
Astra Sedán	9.98	2.07	●		
Combo	10.01		●		
Corsa	10.00	7.06	●		
Monterey	93		●	●	
Tigra	95	9.04			●
Tigra Twin Top	9.04		●		
PEUGEOT					
106	95		●		
306	3.93			●	●
406 Coupe	97			●	
806	95			●	
PORSCHE					
911	7.04	11.11		●	
Boxster	11.04	4.12		●	
Panamera	9.09			●	
RENAULT					
Clio I	95	4.98	●	●	
Kangoo (4dr)	98	2.08	●	●	
Kangoo (5dr)	11.97	2.08	●	●	
Laguna II	01	10.07		●	
Laguna II Grand Tour	01	10.07		●	
Mégane (4/5dr)	2.95	10.02		●	
Mégane Coupe	2.95	10.02		●	
R 19	6.88		●	●	
R 21	4.89		●	●	
R 21 (5dr)	5.89		●	●	
R 21 Nevada	5.89		●	●	
Savanna	5.89		●	●	
ROVER					
45	2.00		●		
MGF	4.96		●	●	
Serie 400	1.97	2.00	●		
Serie 600	95			●	
Serie 800	4.92		●	●	
SAAB					
900	95				●
9-3	3.98	9.02			●
SEAT					
Córdoba	99	02	●		
Ibiza I	89	92	●		
Ibiza II	92	4.99	●	●	
Toledo II	91	11.98	●	●	
SKODA					
Favorit	93		●	●	
Felicia	4.95		●	●	
Forman	95		●	●	
Superb	5.02	3.08		●	
SMART					
Roadster Cabrio	4.03		●		
Roadster Coupe	4.03		●		
SSANGYONG					
Actyon	10.06				●
Musso	95	97	●	●	
Musso	98		●		
Musso Sports Pick-up	2.04		●		
Rexton	7.02		●	●	

SUBARU					
BRZ	6.12			●	
Justy	1.07		●		
Legacy	91	94	●		
Legacy	10.98	8.03		●	
Legacy SW	12.98	8.03		●	
Outback	3.99	8.03		●	
SVX	93			●	
SUZUKI					
Baleno	95		●		
Baleno SW	95		●		
Kizashi	10.10			●	
Wagon R+	6.98		●		
TALBOT					
Murena	80		●	●	
TATA					
Indica	10.98	6.10	●	●	
Safari	8.98			●	
TOYOTA					
Carina E (5dr)	4.92				●
Celica	90	94	●		
Celica	94	1.00			●
Corolla	92	97	●		
Corolla (3dr)	97	1.02	●		
Corolla (5dr)	97	1.02	●		●
Corolla Familiar	98	1.02	●		
GT-86	3.12			●	
Land Cruiser	1.08			●	
Paseo	9.96		●		
Rav-4	6.94	00	●		
Starlet	96		●		
VAUXHALL (UK)					
Agila	4.00	9.07	●		●
Astra (3/5dr)	97	4.04	●		
Astra Coupe	10.00	3.05	●		
Astra Estate	5.98	10.04	●		
Astra Saloon	9.98	2.07	●		
Combo	3.02		●		
Corsa	10.00	7.06	●		
Monterey	93		●	●	
Tigra	95	9.04			●
Tigra Twin Top	9.04		●		
VOLKSWAGEN					
Lupo	5.01		●		
Passat V	1.01	3.05		●	
Passat Variant V	1.01	10.05		●	
VOLVO					
480 ES	86		●	●	
740, 760	89	93	●	●	
850	10.93	96		●	
850 SW	10.93	96		●	
940	91		●	●	
C 30	10.06			●	
S 40	96			●	
S 60	4.10			●	
S 80	3.06			●	
V 40	96	3.12		●	
V 50	5.04			●	
V 60	9.10			●	
V 70	8.07			●	
XC 60	5.08			●	
CHRYSLER					
Grand Voyager	10.07			●	
PT Cruiser	6.00		●		
CITROËN					
C25	9.81		●	●	
C35	9.81		●	●	
Jumpy	6.94	1.07		●	

● = *montar con KIT 133 - mount with KIT 133 - monter avec le KIT 133 - mit KIT 133 montieren - montare con KIT 133 - montar com KIT 133*
■ = *montar con KIT 136 - mount with KIT 136 - monter avec le KIT 136 - mit KIT 136 montieren - montare con KIT 136 - montar com KIT 136*

Jumpy	1.07			●	
FIAT					
Ducato	1.82	3.94	●	●	
Scudo	2.96			●	
LANCIA					
Voyager	9.11			●	
PEUGEOT					
Expert	95			●	
VOLKSWAGEN					
Caddy	11.95	3.04	●		

530 mm 21" DVF 53

ALFA ROMEO					
155	4.92		●		
156	1.97			●	
164	89		●	●	
166	10.98		●		
ASTON MARTIN					
DB 7	95		●	●	
AUDI					
80	83		●	●	
A 3	9.96	5.03	●		
A 4	1.95	11.00	●		
A 4 Avant	95	01	●		
A 6	6.94	2.97		●	
A 6 Avant	6.94	12.97		●	
A 8	6.9411	.02	●	●	
RS 2 Avant	5.95		●	●	
TT	11.98	10.06	●	●	
TT	10.06			●	
TT Roadster	11.98	2.07	●	●	
TT Roadster	2.07			●	
BMW					
Compact (E46)	6.01		●		
M 3 (E36)	4.91	00	●		
Serie 3 (E36)	91	2.98	●		
Serie 3 Cabrio	4.00	3.07	●	●	
Serie 3 Touring (E36)	95	00	●		
Z4	4.03	5.09	●		
CADILLAC					
CTS	4.03	1.08		●	
SRX	10.04	1.09		●	
STS	3.05			●	
CHEVROLET					
Camaro	1.11			●	
CHRYSLER					
Crossfire	11.03			●	
PT Cruiser Convertible	5.04			●	
CITROËN					
C4 Aircross	4.12			●	
C-Crosser	2.07			●	
CORVETTE					
C6 Convertible	5.05		●	●	
C6 Coupe	11.04		●	●	
Z06	2.05		●	●	
DAEWOO					
Matiz	9.98		●		
DAIHATSU					
Terios	7.06		●		
DODGE					
Durango	1.11			●	

FERRARI					
F430	3.05			●	
FIAT					
Coupe	5.94		●		
HONDA					
Civic (4dr)	9.01	1.06	●		
Civic Coupe	9.01		●		
Civic IMA	1.04	1.06	●		
CR-V (II)	4.02	11.06	●		
JAGUAR					
XJ	95	3.03	●	●	
XK Convertible	3.96	2.06	●	●	
XK Convertible	3.06			●	
XK Coupe	3.06			●	
JEEP					
Grand Cherokee	4.97	11.10	●	●	
Grand Cherokee	11.10			●	
Patriot	2.07		●	●	
KIA					
Clarus	10.96		●		
Magentis	5.01	4.06	●		
Rio	9.00	3.05	●		
Sephia I	95	97	●		
Sephia II	97		●		
Shuma	98		●		
LANCIA					
Delta	93	9.08	●		●
Lybra	7.99			●	
Lybra SW	7.99			●	
Thesis	1.02			●	
LAND ROVER					
Freelander	1.98	2.06		●	
MASERATI					
Quattroporte	95	3.04	●		
MAZDA					
3	11.03	6.09	●		
323	93	98	●		
323 F (5dr/Sedan)	98		●		
626	4.92	97	●		
626 (Hatchback/Sedan)	5.97		●		
626 SW	2.98		●		
MX3	93		●		●
Xedos	93		●		
MERCEDES BENZ					
GL Class (X164)	9.06	8.12		●	
M Class (W164)	6.05	5.11		●	
R Class (W251)	2.06			●	
MINI					
Roadster	2.12			●	
MITSUBISHI					
3000 GT	93		●		
ASX	2.10			●	
Carisma	10.96		●		
Galant	92	8.96	●		
Outlander	11.06	8.12		●	
Space Gear	5.95		●		
Space Star	6.98	12.04	●		
NISSAN					
100 NX	91		●		
200 SX	95			●	
300 ZX	95			●	●
370 Z	6.09		●		
Almera	10.95	3.00	●		
Almera (3/5dr)	3.00		●		
Máxima	89	94	●		
Micra	2.03		●		
Pathfinder	1.99	3.05		●	

Pixo	6.09		●		
Primera	91	4.02	●		●
Primera Sport Wagon	98	4.02	●		
Terrano II	2.93		●		
OPEL					
Vivaro Combi	8.01			●	
PEUGEOT					
607	2.00			●	
4007	2.07			●	
4008	5.12			●	
PORSCHE					
911	9.97	7.04		●	
Boxster	9.96	11.04		●	
RENAULT					
Clio II	5.98	9.05	●		
Kangoo Combi	2.08			●	
Mégane (4/5dr)	2.95	10.02	●		
Trafic	3.01			●	
SAAB					
9-3	3.98	9.02	●	●	
9-3 Cabrio	2.98	10.03	●	●	
900	95		●	●	
9000	84		●	●	●
SEAT					
Arosa	6.97		●		
Córdoba	1.94	99	●		
Córdoba	12.02		●		
Córdoba Vario	99		●		
Ibiza III	5.99	3.02	●		
Ibiza IV	3.02	3.08	●		
León	10.99	7.05	●		
Toledo I	12.98	11.04	●		
SKODA					
Fabia	3.07		●	●	
Fabia (4dr/5dr/Combi)	12.99	3.07	●		
Fabia Combi	3.07		●	●	
Octavia	96	6.04	●		
Octavia Combi	7.98	1.05	●		
Roomster	9.06		●	●	
Superb	5.02	3.08	●		
SMART					
City-Coupe / Fortwo	7.98	1.07	●	●	
Fortwo	1.07			●	
SUBARU					
Forester	8.97	1.08	●		
Impreza	93	12.00	●		
Impreza SW	93	12.00	●		
Legacy	95	10.98	●		
SUZUKI					
Alto	1.09		●		
Swift	89	10.10	●		
TOYOTA					
Avensis	1.98	4.03	●		
Camry	10.92		●		
Carina E (5dr)	4.92		●		
Celica	90	94			●
Celica	94	1.00	●		
Hilux	8.05		●		
Land Cruiser	2.03	1.08		●	
Yaris	4.99	1.06	●		
VAUXHALL (UK)					
Vivaro	8.01			●	
VOLKSWAGEN					
Bora	1.99		●		
Golf III	11.91	8.97	●		
Golf III Variant	7.93	4.99	●		
Golf IV	8.97	02	●		

● = *montar con KIT 133 - mount with KIT 133 - monter avec le KIT 133 - mit KIT 133 montieren - montare con KIT 133 - montar com KIT 133*
■ = *montar con KIT 136 - mount with KIT 136 - monter avec le KIT 136 - mit KIT 136 montieren - montare con KIT 136 - montar com KIT 136*

Golf IV	02	11.03	●		
Golf IV Variant	5.99	6.07	●		
Lupo	11.98	02	●		
New Beetle	5.99	10.11	●	●	
New Beetle Cabrio	4.03		●	●	
Passat III	88	92	●	●	
Passat IV	93	96	●	●	
Passat V	97	1.01	●	●	
Passat V	1.01	3.05	●		
Passat Variant V	1.01	10.05	●		
Passat Variant	97	1.01	●	●	
Phaeton	11.02			●	
Polo III	10.01	6.09	●		
Tiguan	9.07			●	
Vento	4.92		●		
VOLVO					
440-460	89		●	●	
850	10.93	96	●		
850 SW	10.93	96	●		
C 70	9.97	1.06	●	●	
S 40	96	2.04	●		
S 60	3.00	8.04		●	
S 70	96		●	●	
S 80	10.98	4.03		●	
S 90	96		●	●	
V 40	96	3.12	●		
V 70	96	3.00	●	●	
V 70	3.00	8.04		●	
V 90	96		●	●	
XC 70	9.00	8.04		●	
CHRYSLER					
PT Cruiser	6.00			●	
KIA					
Pregio	10.96		●		
SEAT					
Inca	11.95		●		
VOLKSWAGEN					
California	95	7.03	●	●	
Caravelle	95	7.03	●	●	
Transporter	95	7.03	●	●	

550 mm 22" DVF 55

ALFA ROMEO					
145	95		●		
146	95		●		
147	1.06		●		
156	1.97		●		
Brera	1.06		●		
Spider	9.06		●		
ASTON MARTIN					
Cignet	4.11		●		
AUDI					
100	89		●	●	
A 4 (8E2;B6)	02	11	●	●	
A 4 (8E3;B7)	04	08	●	●	
A 4 Avant (8E5;B6)	03	04	●	●	
A 4 Avant (8ED;B7)	04	08	●	●	
A 6	6.94	2.97	●		
A 6	2.97	8.01	●	●	
A 6 (4B2;C5)	01	04	●	●	
A 6 Avant	6.94	12.97	●		
A 6 Avant	12.97	8.01	●	●	
A 6 Avant (4B5;C5)	01	05	●	●	
Cabriolet	5.95		●	●	
Coupe	89		●	●	●
RS 4 (8ED;B7)	05	08	●	●	

RS 4 Avant (8ED;B7)	06	08	●	●	
RS 4 Cabrio (8HE;B7)	06	08	●	●	
S 4 (8E2;B6)	02	11	●	●	
S 4 (8E3;B7)	04	08	●	●	
S 4 Avant (8E5;B6)	03	04	●	●	
S 4 Avant (8ED;B7)	04	08	●	●	
S 4 Cabrio (8H7;B6)	03	05	●	●	
S 4 Cabrio (8HE;B7)	05	09	●	●	
S 6	5.95		●	●	
S 8	9.97		●	●	
TT	10.06		●		
TT Roadster	2.07		●		
BMW					
M3 Cabrio (E36)	95		●		
Serie 1 (F20, F21)	6.11		●		
Serie 3 (E46)	2.98	1.05	●		
Serie 3 Touring (E46)	00	9.05	●		
Serie X5	5.00	2.07		●	
X3	1.04	9.10	●		
Z4	5.09		●	●	
CADILLAC					
ATS	2.13		●		
BLS	4.06		●	●	
CTS	4.03		●		
CTS Wagon	1.08		●		
Escalade	10.06		●	●	
Seville	98		●	●	
SRX	10.04	1.09	●		
CHEVROLET					
Alero	3.99		●		
Aveo (3/5dr)	4.08	3.11	●		
Aveo (4dr)	1.06	3.11	●		
Blazer trail	9.01		●	●	
Corvette	9.97	2.05	●	●	
Corvette Cabrio	9.97	5.05	●	●	
Epica	6.06		●		
Matiz	4.05		●		
Nubira SW	11.04		●		
Tahoe	12.99		●	●	
Trail Blazer	9.01		●	●	
CHRYSLER					
300 C	7.04		●	●	
300 C SW	11.04		●	●	
300 M	10.98	97		●	
Neon	5.99		●		
Sebring	4.01	7.07	●	●	
Sebring	7.07			●	
Sebring Cabrio	4.01	7.07	●	●	
Sebring Cabrio	7.07			●	
Stratus	96		●	●	
CITROËN					
AX	86		●		
Pluriel	5.03		●		
XM	90		●	●	
Xsara	9.97		●		
ZX	4.91		●		
DACIA					
Dokker	11.12		●		
Lodgy	3.12		●		
Logan	11.12		●		
Logan MCV	3.13		●		
Sandero	4.13		●		
DAEWOO					
Evanda	12.02		●		
Kalos	11.02		●		
Lacetti	2.04		●		
Leganza	10.97		●		
Nubira	6.03		●		
DODGE					

Avenger	6.07			●	
Durango	1.11		●		
RAM	1.03		●	●	
FIAT					
Brava	95		●		
Dobló Cargo	3.01	2.10	●		
Dobló Panorama	3.01	2.10	●		
Marea	1.97		●		
Multipla	1.99			●	
Punto	11.99	10.05	●		
Stilo	10.01		●		
Stilo Multiwagon	3.03		●		
FORD					
Cougar	11.98		●		●
Fiesta (3/5dr)	11.01	10.08	●		
Focus	11.98	11.04	●		
Focus Wagon	11.98	11.04	●		
Fusion	11.02		●		
Mondeo	11.00	3.07	●		
Mondeo Wagon	11.00	3.07	●		
Tourneo Connect	6.02	13	●		
GALLOPER					
Santamo	11.98		●		
HONDA					
Accord	7.08			●	
Accord	91	3.03	●		
Accord Coupe	93		●		
Accord Tourer	7.08			●	
HYUNDAI					
Accent	7.06		●		
Coupe	96	2.02	●		●
Coupe	2.02		●		
Getz	11.02		●		
i10	1.08		●		
Matrix	6.01		●		
Santa Fe	2.01	3.06	●		
Sonata	11.98	4.05	●		
Terracan	2.02		●		
Trajet	3.00			●	
XG	2.99		●		
ISUZU					
D-MAX (Rodeo)	5.02		●		
JAGUAR					
XK Convertible	3.06		●		
XK Coupe	3.06		●		
X-Type	6.01		●		
JEEP					
Compass	9.06		●		
Grand Cherokee	11.10		●		
KIA					
Picanto	4.04		●		
Rio (5dr)	7.05		●		
Rio	3.05	9.11	●		
LANCIA					
Flavia	3.12			●	
Lybra	7.99		●		
Lybra SW	7.99		●		
LAND ROVER					
Discovery	10.04		●	●	
Freelander	1.98	2.06	●		
Range Rover	95	3.02	●	●	
Range Rover Sport	6.05	8.13	●	●	
LEXUS					
IS	4.99	6.13	●		
IS Sport Cross	10.01		●		
RX	6.03			●	

● = *montar con KIT 133 - mount with KIT 133 - monter avec le KIT 133 - mit KIT 133 montieren - montare con KIT 133 - montar com KIT 133*
■ = *montar con KIT 136 - mount with KIT 136 - monter avec le KIT 136 - mit KIT 136 montieren - montare con KIT 136 - montar com KIT 136*

MAZDA					
6	6.02	8.07	●		
6 Wagon	11.02	8.07	●		
MPV	6.97	9.99	●		
RX 7 Coupe	89		●	●	●
MERCEDES BENZ					
C Class SW (S203)	3.01	4.04		●	
C Class (203)	00	07	●	●	
C Class Sportcoupe (203)	08	08	●	●	
C Class T-Model (203)	03	07	●	●	
CLC (203)	08	10	●	●	
CLK (209)	02	08	●	●	
GLK Class (X204)	6.08		●		
M Class (W163)	3.98	6.05	●	●	
S Class (W126)	80	6.91	●	●	
SLK Class (R170)	11.94	4.04	●	●	
SLK Class (R171)	4.04	1.11	●	●	
SLK Class (R172)	2.11		●	●	
V Class	10.96			●■	
MB 100	87		●	●	
MG					
ZT	6.01		●	●	
MITSUBISHI					
Galant	92	8.96			●
Galant	8.96		●		
Galant Wagon	93		●		
Grandis	1.08			●	
L200	11.05		●		
Montero / Pajero	2.07		●		
Outlander	4.03	11.06	●		
Space Runner	95		●		
Space Star	1.13		●		
NISSAN					
200 SX	95		●		
300 ZX	95		●		
Almera(4dr)	7.00		●		
GT-R	2.09		●		
Juke	6.10		●		
NV200	2.10		●		
Pathfinder	1.99	3.05	●		
OPEL					
Agila	9.07		●		
Astra (5dr)	4.04	12.09	●		
Astra GTC	3.05	10.11	●		
Astra Sedán	2.07	6.12	●		
Astra SW	10.04	10.10	●		
Astra TwinTop	5.06		●		
GT	6.07			●	
Zafira	9.05	10.11		●	
PEUGEOT					
306	3.93		●		
406	11.95			●	
406 SW	10.96			●	
605	8.89		●	●	
Partner	9.96	4.08	●	●	
PORSCHE					
911	9.97	11.11	●		
Boxster	9.96	4.12	●		
Carrera GT	7.03		●		
RENAULT					
Alpine A610	4.91		●	●	
Espace I	84	3.89	●	●	
Grand Scénic	12.04	2.09		●	
Laguna	1.94	01			●
Mégane Coupe	2.95	10.02	●		
R 25			●	●	●
Scénic	12.04	2.09		●	
REVA					
REVAi / L-ion	08		●		

ROVER					
75	2.99		●	●	
Serie 600	95		●		
SEAT					
Exeo (3R2)	09	11	●	●	
Exeo (3R5)	09		●	●	
SMART					
Fortwo	1.07		●		
Fortwo	1.07		●		
SSANGYONG					
Actyon	10.06		●		
Actyon Sports	4.07		●		
Kyron	5.05		●		
SUBARU					
BRZ	6.12		●		
Impreza	12.00	1.08	●		
Impreza SW	12.00		●		
Legacy	10.98	8.03	●		
Legacy SW	12.98	8.03	●		
Outback	3.99	8.03	●		
R1	11.06		●		
SVX	93		●		
SUZUKI					
Liana	7.01		●		
Liana Sedán	5.02		●		
Splash	1.08		●		
Swift	10.10		●		
TASSO					
Bingo			●		
TOYOTA					
Avensis Verso	8.01		●		
Corolla Verso	1.02	5.04	●		
Corolla (3/5dr)	1.02		●		
GT-86	3.12		●		
iQ	4.09		●		
Land Cruiser	2.03	1.08	●		
Land Cruiser 100	1.98			●	
Land Cruiser 200	2.08			●	
VAUXHALL (UK)					
Agila	9.07		●		
Astra (5dr)	4.04	12.09	●		
Astra Estate	10.04	10.10	●		
Astra GTC	3.05	10.11	●		
Astra Saloon	2.07	6.12	●		
Astra TwinTop	5.06		●		
GT	6.07			●	
Zafira	9.05	10.11		●	
VOLKSWAGEN					
Amarok	9.10	5.12		●	
Fox	6.05		●		
VOLVO					
S 60	8.04	4.10		●	
S 80	4.03	3.06		●	
V 70	8.04	8.07		●	
XC 70	8.04	8.07		●	
XC 90	10.02			●	
CHRYSLER					
Voyager	91	12.95	●		
CITROËN					
Berlingo	9.96	4.08	●	●	
Berlingo van	9.96	4.08	●	●	
Jumper	5.95	4.06	●	●	
Jumper	4.06			●	
FIAT					
Ducato	3.94	7.06	●	●	

Ducato	7.06			●	
FORD					
Transit	9.85	7.00	●	●	
Transit Tourneo	11.94	12.00	●	●	
MERCEDES BENZ					
Sprinter	95	5.06		●	
PEUGEOT					
Boxer	95	4.06	●	●	
Boxer	4.06			●	
RENAULT					
Kangoo Express	2.08		●	●	
VOLKSWAGEN					
LT	4.96			●	

580 mm 23" DVF 58

ALFA ROMEO					
159	9.05		●		
159 Sportwagon	4.06		●		
Giulietta	4.10		●		
BMW					
Serie 3 Coupe (E46)	4.99	6.06	●		
Serie 5 (E60)	7.03	3.10		●	
Serie 5 Touring (E61)	6.04	9.10		●	
Serie 6 Cabrio	6.04	6.11		●	
Serie 6 Coupe	2.04	11.10		●	
CADILLAC					
BLS Wagon	12.07		●	●	
STS	3.05		●		
CHEVROLET					
Spark	3.10		●		
FIAT					
Bravo	9.95	4.07	●		
Idea	1.04		●		
Panda	9.03	2.12	●		
Punto	94	11.99	●		
HONDA					
Civic	1.06	2.12		●	
INFINITI					
EX	10.08		●		
FX	10.08		●		
JAGUAR					
XF	3.08		●		
XF Sportbrake	9.12		●		
XJ	1.10		●		
LANCIA					
Musa	10.04		●		
Ypsilon	2.96	10.02	●		
LAND ROVER					
Range Rover Evoque	6.11		●		
MERCEDES BENZ					
A Class (W169)	10.04	6.12		●	
B Class (W245)	5.05	10.11		●	
OPEL					
Meriva	6.10			●	
PORSCHE					
Panamera	9.09		●		
RENAULT					
Kangoo Combi	2.08		●		
Spider	1.97		●		
SAAB					

● = *montar con KIT 133 - mount with KIT 133 - monter avec le KIT 133 - mit KIT 133 montieren - montare con KIT 133 - montar com KIT 133*
■ = *montar con KIT 136 - mount with KIT 136 - monter avec le KIT 136 - mit KIT 136 montieren - montare con KIT 136 - montar com KIT 136*

9-3	9.02		●	●
9-3 Cabrio	10.03		●	●
9-3 Sport Hach	8.05		●	●
9-5	10.97		●	●
9-5 SW	10.98		●	●
VAUXHALL (UK)				
Meriva	6.10			●

600 mm 24" DVF 60

ALFA ROMEO				
Mito	9.08		●	
ASTON MARTIN				
DB 9	1.04		●	
DBS	9.07		●	
Rapide	3.10		●	
AUDI				
A 3	5.03	11.04	●	
A 3	11.04	4.12	●	
A 3 Cabrio	4.08		●	
A 3 Sportback	10.04	9.12	●	
BMW				
Serie 3 (E90)	1.05	10.11	●	
Serie 3 (F30)	10.11		●	
Serie 3 Cabrio (E93)	3.07		●	
Serie 3 Coupe (E92)	6.06		●	
Serie 3 GT	2.13		●	
Serie 3 Touring (E91)	9.05	6.12	●	
Serie 3 Touring (F31)	6.12		●	
Serie 5 (E60)	7.03	3.10	●	
Serie 5 Touring (E61)	6.04	9.10	●	
Serie 6 Cabrio	6.04	6.11	●	
Serie 6 Coupe	2.04	11.10	●	
Serie X5	5.00		●	
X1	10.09		●	
X6	5.08		●	
CHEVROLET				
Camaro	1.11		●	
Captiva	7.06		●	
Cruze (4dr)	5.09		●	
Cruze (5dr)	6.11		●	
Cruze SW	8.12		●	
Malibu	1.12		●	
Orlando	12.10		●	
CHRYSLER				
300 M	10.98	97	●	
Sebring	7.07		●	
Sebring Cabrio	7.07		●	
CITROËN				
C2	9.03		●	
C3	5.02	11.09	●	
C4 (5dr)	12.04	11.09		●
C4 Aircross	4.12		●	
C4 Coupe	12.04	11.09		●
C4 Sedán	11.08			●
C-Crosser	2.07		●	
C-Elysée	11.12		●	
CX	74		●	
DS3	11.09		●	
DS3 Cabrio	3.13		●	
DS5	11.11			●
Xantia	4.93	8.97	●	
Xantia II	9.97		●	
Xantia II Familiar	9.97		●	
DAEWOO				
Tacuma	10.00		●	

DODGE				
Avenger	6.07		●	
Caliber	6.06		●	
Charger	1.12		●	
Journey	06.08		●	
FERRARI				
612 Scaglietti	4.04		●	
F430	3.05		●	
FIAT				
500	10.07		●	
Bravo	4.07		●	
Croma	6.05		●	
Freemont	8.11		●	
Multipla	1.99		●	
Palio Weekend	2.98		●	
Strada	6.99		●	
FORD				
C-MAX	12.10			●
Grand C-MAX	12.10			●
Ka	10.08		●	
Kuga	3.08	3.13	●	
Ranger	4.11		●	
HONDA				
Accord	7.08		●	
Accord Tourer	7.08		●	
Civic (3/5dr)	9.01	1.06	●	
CR-Z	6.10		●	
Stream	6.01		●	
HYUNDAI				
Genesis	1.08		●	
i20	9.08		●	
i30	10.07	11.11	●	
i30 CW	10.07	6.12	●	
ix35	1.10		●	
ix55	9.08		●	
Santa Fe	3.06	9.12	●	
Sonata	4.05	1.10	●	
Tucson	11.04		●	
JAGUAR				
S-Type	6.01		●	
KIA				
Carens	8.99	9.06	●	
Carnival	3.99	6.06	●	●
Cee'd	12.06		●	
Cee'd SW	9.07		●	
Cerato	6.04		●	
Magentis	4.06		●	
Opirus	10.03		●	
Optima	3.12		●	
Pro Cee'd	2.08		●	
Sorento	7.02		●	
Soul	2.09		●	
Sportage	9.04		●	
LADA				
Kalina (1118)	10.04		●	
Kalina (1119)	10.04		●	
LANCIA				
Delta	9.08		●	
Flavia	3.12		●	
K	95		●	
Thema	9.11		●	
Ypsilon	10.02		●	
LAND ROVER				
Freelander 2	2.06		●	
LEXUS				
GS	8.97	1.12	●	
IS	6.13		●	
LS	4.06		●	

SC	8.01		●	
LIGIER				
JS 16	94		●	
MAZDA				
2	4.03		●	
3	6.09		●	
6	8.07		●	
6 SW	8.07		●	
MPV	9.99		●	●
Premacy	7.99		●	
MERCEDES BENZ				
190 (W201)	84	93	●	
A Class (W168)	7.97	10.04		●
A Class (W176)	6.12		●	
C Class (W202)	3.93	5.00	●	
C Class (W203)	5.00	4.04	●	
C Class (W204)	1.07		●	●
C Class Coupe (C204)	1.07		●	●
C Class Sp.cp. (CL203)	3.01	4.04	●	
C Class SW (S203)	3.01	4.04	●	
C Class SW (S204)	8.07		●	●
CLA Class (C117)	2.13		●	
CLK Class (C208)	97	5.02	●	
CLS Class (C218)	1.11		●	●
CLS Class S.Brake(X218)	10.12		●	●
E Class (W124)	93	97	●	
E Class (W210)	95	3.02	●	
E Class (W212)	1.09		●	●
E Class Cabrio (A207)	1.09		●	●
E Class Coupe (C207)	1.09		●	●
E Class SW (S212)	1.09		●	●
Vaneo	11.01			●
MITSUBISHI				
ASX	2.10		●	
Lancer	1.08		●	
Lancer EVO VII	2.01		●	
Lancer Sportback	6.08		●	
Outlander	11.06	8.12	●	
NISSAN				
Navara	10.04		●	
Note	3.06	9.13	●	
Pathfinder	3.05		●	
Primastar	9.02		●	
Qashqai / Qashqai +2	2.07		●	
Serena	10.92		●	●
X-Trail	7.01		●	
OPEL				
Antara	5.06		●	
Astra (5dr)	12.09			●
Astra GTC	10.11			●
Astra Sports Tourer	10.10			●
Cascada Cabrio	3.13			●
Insignia	7.08		●	
Insignia Sports Tourer	7.08		●	
Meriva	4.03	6.10	●	●
Omega	95		●	
Omega Sport Wagon	97		●	
Signum	4.03		●	
Sintra	97		●	●
Vectra	4.02		●	
Vectra Caravan	11.03		●	
Vivaro Combi	8.01		●	
Zafira	4.99	9.05	●	●
PEUGEOT				
1007	6.05		●	
206 SW	5.02		●	
307 CC	10.03			●
406	11.95		●	
406 SW	10.96		●	
4007	2.07		●	
4008	5.12		●	

● = *montar con KIT 133 - mount with KIT 133 - monter avec le KIT 133 - mit KIT 133 montieren - montare con KIT 133 - montar com KIT 133*
■ = *montar con KIT 136 - mount with KIT 136 - monter avec le KIT 136 - mit KIT 136 montieren - montare con KIT 136 - montar com KIT 136*

PORSCHE				
Cayenne	6.10		●	●
RENAULT				
Clio Grand Tour	2.08	11.12	●	
Clio III	9.05	11.12	●	
Espace II	4.89	97	●●	●●
Koleos	9.08		●	
Laguna	1.94	01	●	
Laguna II	01	10.07	●	
Laguna II Grand Tour	01	10.07	●	
Latitude	2.11		●	
Mégane	10.02	1.09	●	
Mégane (5dr)	1.09		●	
Mégane Cabrio	10.03	6.10	●	
Mégane CC	6.10		●	
Mégane Coupe	1.09		●	
Mégane Grand Tour	9.03	1.09	●	
Mégane Sedan	9.03		●	
Mégane Sport Tourer	1.09		●	
Modus	10.04			●
Scénic	1.97	6.03	●	
Trafic	3.01		●	
Twingo	3.07		●	
Wind	7.10		●	
Zoe	6.12		●	
SEAT				
Ibiza V (5dr)	3.08		●	
Ibiza V SC	3.08		●	
Ibiza V ST	3.10		●	
SKODA				
Octavia	6.04	3.13	●	
Octavia Combi	1.05	3.13	●	
Superb	3.08		●	
Superb Combi	10.09		●	
Yeti	5.09		●	
SSANGYONG				
Korando	11.10		●	
Rodius	5.05		●	
SUBARU				
Forester	1.08		●	
Impreza	1.08		●	
Legacy	8.03	9.09	●	
Legacy SW	8.03	9.09	●	
Outback	8.03	9.09	●	
SUZUKI				
Kizashi	10.10		●	
TATA				
Indica Vista	6.10		●	
Indigo SW	1.03		●	
Safari	8.98		●	
TOYOTA				
Avensis	4.03	1.09	●	
Avensis (5dr)	4.03	1.09	●	
Avensis Wagon	4.03	1.09	●	
Land Cruiser 100	1.98		●	
Land Cruiser 200	2.08		●	
MR2	5.00		●	
Picnic	2.99		●	
Rav-4	00	5.13	●	
Urban Cruiser	4.09		●	
Yaris	1.06	9.11	●	
VAUXHALL (UK)				
Antara	5.06		●	
Astra (5dr)	12.09			●
Astra GTC	10.11			●
Astra Sports Tourer	10.10			●
Cascada	3.13			●
Insignia	7.08		●	
Insignia Sports Tourer	7.08		●	

Meriva	4.03	6.10	●	●
Omega	95		●	
Omega Sport Wagon	97		●	
Signum	4.03		●	
Sintra	97		●	●
Vectra	4.02		●	
Vectra Estate	11.03		●	
Vivaro	8.01		●	
Zafira	4.99	9.05	●	●
VOLKSWAGEN				
Amarok	9.10	5.12	●	
Eos	4.06		●	
Golf V	11.03	11.05	●	
Golf V	11.05	10.08	●	
Golf V Variant	6.07	7.09	●	
Golf VI	10.08	11.12	●	
Golf VI Variant	7.09	3.13	●	
Jetta	10.05	6.10	●	
Multivan	6.03		●	●
Passat CC	6.08	11.11	●	
Passat Variant VI	10.05	8.10	●	
Passat Variant VII	8.10	7.11	●	
Passat VI	3.05	8.10	●	
Passat VII	8.10	7.11	●	
Phaeton	11.02		●	
Polo IV	6.09		●	
Scirocco	9.08		●	
Tiguan	9.07		●	
Touareg	1.10		●	●
Touran	6.09		●	
VOLVO				
S 60	3.00	4.10	●	
S 80	10.98	3.06	●	
V 70	3.00	8.07	●	
XC 70	9.00	8.07	●	
XC 90	10.02		●	
BMC				
Megastar	04			●
CHEVROLET				
Trans Sport	2.98		●	●
CHRYSLER				
Grand Voyager	10.07		●	
FORD				
Transit	7.00			●
LANCIA				
Voyager	9.11		●	
MERCEDES BENZ				
Sprinter	95	5.06	●	
Sprinter	6.06			●
Vito	9.05			●
NISSAN				
Interstar	7.02	10.11	●■	●■
Vanette Cargo	1.95		●	●
RENAULT				
Mascott	1.99	6.04	●■	●■
Master	7.98	2.10	●■	●■
VOLKSWAGEN				
Caddy	3.04		●	
LT	4.96		●	
Transporter	7.03		●	●
Transporter Shuttle	12.03		●	●

650 mm 26" DVF 65

AUDI				
Q 7	3.06		●	●
BMW				
Serie 5 (F10)	3.10		●	
Serie 5 GT (F07)	10.09		●	
Serie 5 Touring (F11)	9.10		●	
Serie 6 Cabrio	6.11		●	
Serie 6 Coupe	6.11		●	
Serie 6 Gran Coupe	6.11		●	
Serie 7 (E66)	7.08		●	
X3	9.10		●	
CADILLAC				
SRX	1.09		●	
CHEVROLET				
Aveo	3.11		●	
Trax	12.12		●	
Volt	11.11		●	●
CITROËN				
Berlingo Combi	4.08		●	
C1	6.05		●	
C3	11.09		●	
C3 Picasso	2.09		●	
C4	11.09			●
C4 Picasso	5.13			●
C5	3.01	10.04	●	
C5 Break	6.01		●	
DS4	4.11			●
Evasión	95		●	
Nemo	2.08		●	
Xsara Picasso	12.99		●	●
FERRARI				
599 GTB	6.06		●	
California	7.08		●	
FIAT				
500 L	10.07		●	
Fiorino	2.08		●	
Linea	6.07		●	
Punto	10.05		●	
Sedici	6.06		●	
Ulysse	95	11.02	●	
FORD				
B-MAX	10.12			●
C-MAX	2.07	12.10	●	
Fiesta (3/5dr)	10.08		●	
Focus	11.04	4.11	●	
Focus (4dr)	4.05	4.11	●	
Focus CC	10.06		●	
Focus C-MAX	11.03	2.07	●	
Focus Wagon	11.04	5.11	●	
Galaxy	5.06			●
Mondeo Sportbreak	3.07		●	
S-Max	5.06			●
HONDA				
Accord	2.06	7.08	●	
Accord (4dr)	3.03	2.06	●	
Accord Tourer	3.03	7.08	●	
Civic	1.06		●	
CR-V (III)	1.07	10.12	●	
CR-V (IV)	10.12		●	
FR-V	11.04		●	
Insight	4.09		●	
Jazz	7.08		●	
HYUNDAI				
H-1	10.97		●	
i30	11.11		●	
i30 CW	6.12		●	
i40	3.12		●	
i40 CW	7.11		●	
ix20	11.10		●	

● = *montar con KIT 133 - mount with KIT 133 - monter avec le KIT 133 - mit KIT 133 montieren - montare con KIT 133 - montar com KIT 133*
■ = *montar con KIT 136 - mount with KIT 136 - monter avec le KIT 136 - mit KIT 136 montieren - montare con KIT 136 - montar com KIT 136*

Santa Fe	9.12		●	
Sonata	1.10		●	
Trajet	3.00		●	
Veloster	3.11		●	
INFINITI				
G37 Cabrio	9.10		●	
G37 Coupe	10.08		●	
G37 Sedán	10.08		●	
M	3.10		●	
KIA				
Carens	9.06	4.13	●	
Carnival	6.06		●	
Rio	9.11		●	
Venga	2.10		●	
LANCIA				
Thesis	1.02		●	
Z	4.95		●	
LEXUS				
CT	12.10		●	
GS	1.12		●	
RX	6.03	12.08	●	
RX	12.08		●	
LOTUS				
Evora	5.09		●	
Exige	9.01		●	
MASERATI				
Gran Cabrio	6.10		●	
Gran Turismo	8.08		●	
Quattroporte	3.04		●	
MAZDA				
5	2.05		●	
CX-5	11.11		●	
CX-7	10.07		●	
MERCEDES BENZ				
A Class (W168)	7.97	10.04	●	
A Class (W169)	10.04	6.12	●	
B Class (W245)	5.05	10.11	●	
B Class (W246)	11.11		●	
CL Class (C215)	3.99	3.06	●	●
CL Class (CL216)	5.06		●	●
Clase CLS (C219)	10.04	12.10	●	●
E Class (W211)	3.02	12.08	●	●
E Class SW (S210)	96	3.03	●	
E Class SW (S211)	3.03	12.08	●	●
S Class (W221)	10.05		●	●
SL Class (R230)	10.01	1.12	●	●
V Class	10.96		●■	
Vaneo	11.01		●	
MITSUBISHI				
Colt CZC	4.06		●	
Outlander	8.12		●	
NISSAN				
Almera Tino	8.00		●	
Leaf	11.10		●	
Máxima	95		●	
Murano	10.08		●	
Note	9.13		●	
Primera	4.02		●	
Primera Sport Wagon	4.02		●	
OPEL				
Adam	10.12		●	
Ampera	11.11		●	●
Astra (5dr)	12.09		●	
Astra Sports Tourer	10.10		●	
Cascada Cabrio	3.13		●	
Corsa	7.06		●	
Meriva	6.10		●	
Mokka	6.12		●	

PEUGEOT				
107	6.05		●	
206	10.98		●	
206 CC	01		●	
206+	1.09		●	
207	2.06		●	
207 CC	1.07		●	
207 SW	6.07		●	
208	3.12		●	
307	6.01	5.05		●
307	5.05			●
307 SW	5.02	5.05		●
307 SW	5.05			●
308	9.07			●
308 CC	4.09			●
308 SW	3.08			●
406 Coupe	97		●	
508	11.10		●	●
508 SW	11.10		●	●
607	2.00		●	
806	95		●	
2008	5.13		●	
3008	6.09			●
5008	9.09			●
Bipper	2.08		●	
Partner van	4.08		●	
Partner Tepee	4.08		●	
RCZ	3.10		●	●
PORSCHE				
Cayenne	1.03	6.10	●	●
RENAULT				
Avantime	9.01		●	
Captur	3.13		●	
Clio Grand Tour IV	11.12		●	
Clio IV	11.12		●	
Espace III	98	11.02	●●	
Espace IV	11.02			●
Fluence	2.10		●	
Grand Scénic	12.04	2.09	●	
Grand Scénic	2.09			●
Laguna Coupé	3.08		●	
Laguna III	10.07		●	
Laguna III Grand Tour	10.07		●	
Scénic	12.04	2.09	●	
Scénic	2.09			●
Twingo	93	3.07	●	
Vel Satis	5.02			●
SEAT				
León	7.05	9.12	●	●
SMART				
Forfour	4.04		●	
SUBARU				
Legacy	9.09		●	
Legacy SW	9.09		●	
Outback	9.09		●	
XV	3.12		●	
SUZUKI				
SX4	6.06		●	
TATA				
Aria	10.12		●	●
TOYOTA				
Auris	10.06		●	
Auris SW Sports	6.13		●	
Avensis	1.09		●	
Avensis Cross Sport	1.09		●	
Aygo	6.05		●	
Corolla Verso	5.04		●	
Land Cruiser	1.08		●	
Prius II	8.03	3.09	●	
Prius III	3.09		●	
Prius+	3.12		●	

Rav-4	5.13		●	
Verso	4.09		●	
VAUXHALL (UK)				
Adam	10.12		●	
Ampera	11.11		●	●
Astra (5dr)	12.09		●	
Astra Sports Tourer	10.10		●	
Cascada	3.13		●	
Corsa	7.06		●	
Meriva	6.10		●	
Mokka	6.12		●	
VOLKSWAGEN				
Touareg	2.03	1.10	●	●
VOLVO				
C 30	10.06		●	
C 70	1.06		●	
S 40	2.04		●	
S 60	4.10		●	
S 80	3.06		●	
V 40	3.12		●	
V 50	5.04		●	
V 60	9.10		●	
V 70	8.07		●	
XC 60	5.08		●	
BMC				
Megastar	04		●	
CITROËN				
Berlingo van	4.08		●	
Jumper	4.06		●	
Jumpy	6.94		●	
FIAT				
Ducato	7.06		●	
Scudo	2.96		●	
MERCEDES BENZ				
Sprinter	6.06		●	
Viano (W639)	9.03	2.05	●■	●■
Viano (W639)	3.05			●
NISSAN				
NV400	10.11		●	●
OPEL				
Movano	4.10		●	●
PEUGEOT				
Boxer	4.06		●	
Expert	95		●	
RENAULT				
Master	2.10		●	●
VAUXHALL (UK)				
Movano	4.10		●	●

700 mm 28" DVF 70

AUDI				
A 2	10.01		●	
CITROËN				
C4	11.09		●	
C4 (5dr)	12.04	11.09	●	
C4 Coupé	12.04	11.09	●	
C4 Grand Picasso	2.07	5.13	●	●
C4 Picasso	2.07	5.13	●	●
C4 Picasso	5.13		●	
C4 Sedán	11.08		●	
C6	12.05		●	●

● = *montar con KIT 133 - mount with KIT 133 - monter avec le KIT 133 - mit KIT 133 montieren - montare con KIT 133 - montar com KIT 133*
■ = *montar con KIT 136 - mount with KIT 136 - monter avec le KIT 136 - mit KIT 136 montieren - montare con KIT 136 - montar com KIT 136*

C-Zero	10.10		●	
DS4	4.11		●	
DS5	11.11		●	
FERRARI				
FF	6.11		●	
FORD				
B-MAX	10.12		●	
C-MAX	12.10		●	
Focus	4.11		●	●
Focus (4dr)	4.11		●	●
Focus Sportbreak	5.11		●	●
Galaxy	01	5.06	●	●
Galaxy	5.06		●	
Grand C-MAX	12.10		●	
Kuga	3.13		●	●
S-Max	5.06		●	
HONDA				
FCX	7.08		●	●
KIA				
Carens	4.13		●	●
MERCEDES BENZ				
GL Class (X164)	9.06	8.12	●	
M Class (W164)	6.05	5.11	●	
R Class (W251)	2.06		●	
S Class (W220)	9.01	10.05	●	●
MITSUBISHI				
Grandis	1.08		●	
i-MIEV	11.10		●	
OPEL				
Astra GTC	10.11		●	
Zafira	9.05	10.11	●	
Zafira	10.11		●	●
PEUGEOT				
307	6.01		●	
307 CC	10.03		●	
307 SW	5.02		●	
308	9.07		●	
308 CC	4.09		●	
308 SW	3.08		●	
407	4.04		●	●
407 Coupé	2.06		●	●
407 SW	11.04		●	●
3008	6.09		●	
5008	9.09		●	
iOn	11.10		●	
RENAULT				
Espace IV	11.02		●	
Grand Scénic	2.09		●	
Modus	10.04		●	
Scénic	2.09		●	
Vel Satis	5.02		●	
SEAT				
Alhambra	11.01	6.10	●	●
SUBARU				
Trezia	3.11		●	
TESLA				
Model S	1.13		●	
TOYOTA				
Verso S	11.10		●	
Yaris	9.11		●	
VAUXHALL (UK)				
Astra GTC	10.11		●	
Zafira	9.05	10.11	●	
Zafira	10.11		●	●

VOLKSWAGEN					
Golf Plus	1.05		●	●	
Sharan	01	5.10	●	●	
Touran	4.03	5.10	●	●	
CHRYSLER					
Grand Voyager	1.96	10.07	●	●	●
Voyager	1.96		●	●	●
FORD					
Tourneo Courier	13		●	●	
Tourneo Custom	5.11		●	●	●
Transit	7.00		●		
MERCEDES BENZ					
Viano (W639)	3.05		●		
Vito	9.05		●		

750 mm 30" DVF 75

AUDI					
A 2	02.00		●	●	
CITROËN					
C4	11.09		●		
C4 Picasso	11.06	3.08		●	
C4 Picasso	4.08	1.13		●	
C4 Picasso	2.13			●	
C4 Grand Picasso I	11.06	3.08		●	
C4 Grand Picasso II	4.08	1.13		●	
C4 Grand Picasso III	2.13			●	
DS4	4.11		●		
DS5	11.11		●		
FORD					
B-MAX	10.12		●		
C-MAX	12.10		●		
Focus	4.11		●		
Focus Turnier	4.11		●		
Galaxy	5.06	12.08	●		
Galaxy	6.09	3.15	●		
S-MAX	5.06	1.09	●		
S-MAX	1.09	1.15	●		
Transit Box	5.14		●		
Transit Connect	9.13		●		
Transit Custom	12.12		●		
PEUGEOT					
308	09.11		●		
RENAULT					
Espace IV	11.02	2.05	●		
Scenic	2.09		●		
Grand Scenic	2.09		●		

800 mm 32" DVF 80

CITROËN					
C4 Picasso	11.06	3.08	●		
C4 Picasso	4.08	1.13	●		
C4 Picasso	2.13		●		
C4 Grand Picasso I	11.06	3.08	●		
C4 Grand Picasso II	4.08	1.13	●		
C4 Grand Picasso III	2.13		●		
OPEL					
Zafira Tourer C	10.11		●		

PEUGEOT					
3008	6.09		●		
5008	6.09		●		

● = *montar con KIT 133 - mount with KIT 133 - monter avec le KIT 133 - mit KIT 133 montieren - montare con KIT 133 - montar com KIT 133*
■ = *montar con KIT 136 - mount with KIT 136 - monter avec le KIT 136 - mit KIT 136 montieren - montare con KIT 136 - montar com KIT 136*

DURAVISION rear

300 mm 12" DVr 30

CITROËN			
C1	6.05		●
C8	9.02		●
DODGE			
Nitro	6.07		●
PEUGEOT			
107	6.05		●
RENAULT			
Twingo	93		●
TOYOTA			
Aygo	6.05		●
Yaris	4.99	1.06	●

350 mm 14" DVr 35

CITROËN			
Berlingo Combi	4.08		●
C3	5.02	11.09	●
Saxo	4.96		●
Xantia II Familiar	9.97		●
DACIA			
Logan Break	2.07	3.13	●
FIAT			
Stilo	10.01		●
Stilo Multiwagon	3.03		●
Ulysse	11.02		●
LANCIA			
Phedra	11.02		●
NISSAN			
Almera (3/5dr)	3.00		●
Pixo	6.09		●
OPEL			
Zafira	9.05	10.11	●
PEUGEOT			
106	95		●
206	10.98		●
206 SW	5.02		●
206+	1.09		●
208	3.12		●
307	6.01		●
307 SW	5.02		●
807	10.02		●
Partner	4.08		●
Partner Tepee	4.08		●
RENAULT			
Clio III	9.05	11.12	●
Espace IV	11.02		●
Laguna II Grand Tour	01	10.07	●
Mégane Coupé	2.95	10.02	●
Scénic	1.97	6.03	●
VAUXHALL (UK)			
Zafira	9.05	10.11	●

400 mm 16" DVr 40

CITROËN			
Xsara Picasso	12.99	10.05	●
DACIA			
Sandero	6.08	4.13	●
MG			
ZR	6.01		●
NISSAN			
Micra	5.98	2.03	●
Micra	2.03	5.10	●
Primastar	9.02		●
Primera Sport Wagon	4.02		●
OPEL			
Astra (3/5dr)	97	4.04	●
Astra Caravan	5.98	10.04	●
Combo	10.01		●
Corsa	10.00	7.06	●
Meriva	6.10		●
Vectra	4.02		●
Vivaro Combi	8.01		●
Zafira	4.99	9.05	●
PEUGEOT			
306	3.93		●
RENAULT			
Espace III	98	11.02	●
VAUXHALL (UK)			
Astra (3/5dr)	97	4.04	●
Astra Estate	5.98	10.04	●
Combo	3.02		●
Corsa	10.00	7.06	●
Meriva	6.10		●
Vectra	4.02		●
Vivaro	8.01		●
Zafira	4.99	9.05	●
CHRYSLER			
Grand Voyager	10.07		●
LANCIA			
Voyager	9.11		●

● = *montar con KIT 133 - mount with KIT 133 - monter avec le KIT 133 - mit KIT 133 montieren - montare con KIT 133 - montar com KIT 133*
■ = *montar con KIT 136 - mount with KIT 136 - monter avec le KIT 136 - mit KIT 136 montieren - montare con KIT 136 - montar com KIT 136*

DOGA

RECUERDE - REMEMBER - RAPPELLEZ - DENKEN SIE DARAN

¡ cambie sus escobillas !
change your wiper blades!
changez vos balais!
Wech Sie die Wischerblätter!

Por su seguridad, por la seguridad de los suyos, por la de los demás.
Para que la lluvia no suponga un peligro.

For your safety, for the safety of your family and those around you.
To protect against the danger of rain and water.

Pour votre sécurité, pour la sécurité des vôtres, pour celle des autres.
Pour que la pluie ne devienne pas un danger.

Zu Ihrer Sicherheit, der Sicherheit Ihrer Familie und der übrigen
Verkehrsteilnehmer. Damit de Regen nicht zur Gefahr wird!

DOGA

MONTAJE - ASSEMBLY - MONTAGE - MONTAGEM - MONTAGGIO - MONTAGE

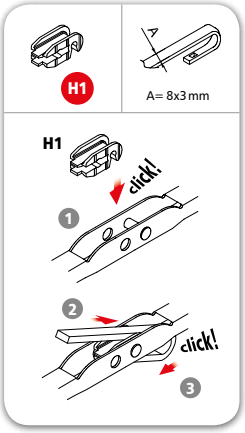

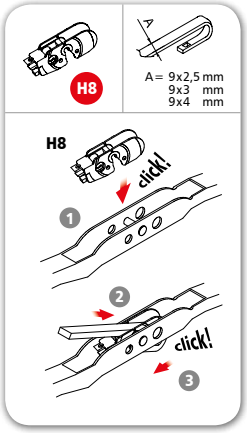

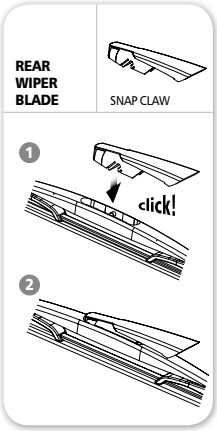

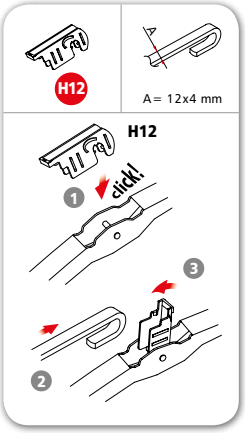

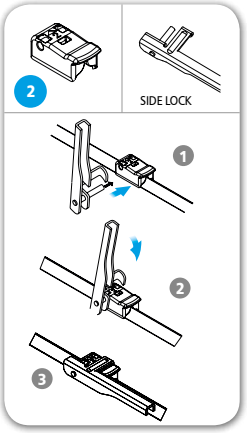

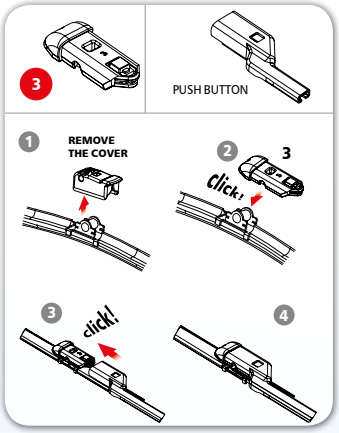

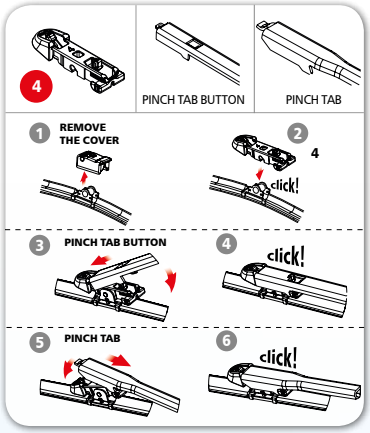

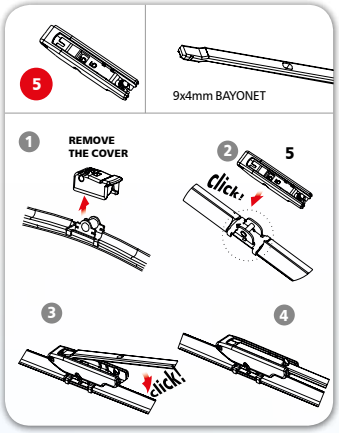

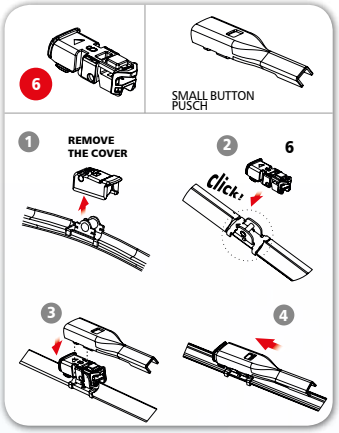

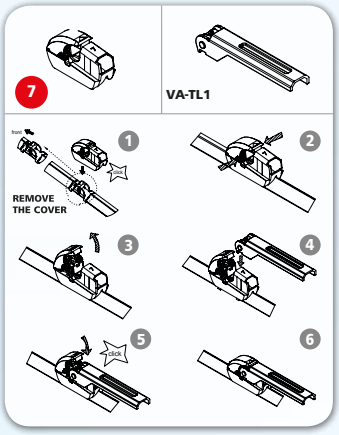

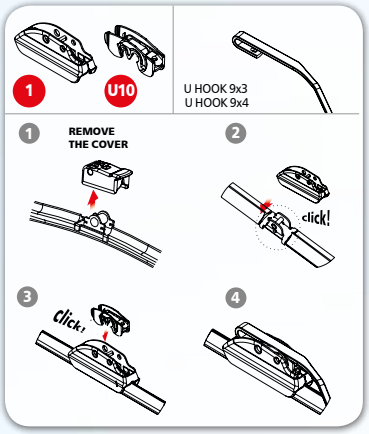

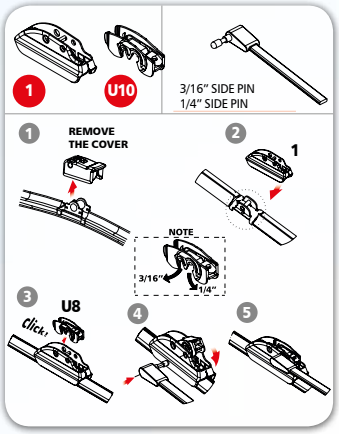

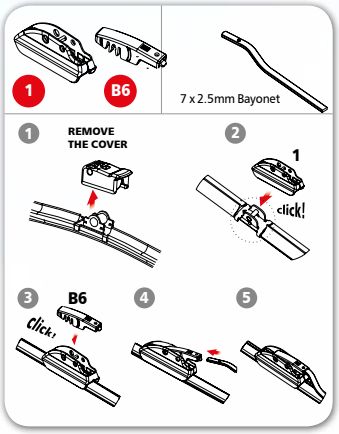

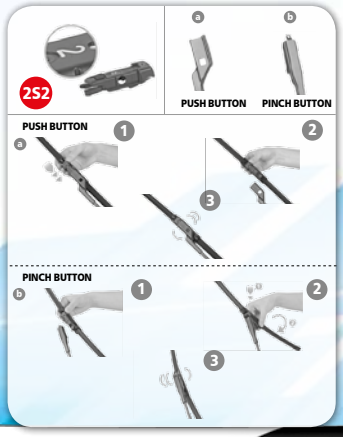

DOGA

DURAVISION

GAMA - RANGE - GAMME - REIHE - GAMMA - GAMA

DURAVISION

WIPER BLADE		HOOK ADAPTORS 8 x 3 H1	9 x 2,5 9 x 3 9 x 4 H8	12 x 4 H12	KIT
DV28	280mm 11"	●	●		
DV35	350mm 14"		●		
DV40	400mm 16"	●	●		
DV45	450mm 18"	●	●		133
DV48	480mm 19"		●		
DV50	500mm 20"		●		
DV53	530mm 21"		●		
DV55	550mm 22"		●		136
DV60	600mm 24"		●		133 136
DV65	650mm 26"		●		133 136
DV70	700mm 28"		●	●	

DURAVISION FLEX

WIPER BLADE		2	3	4	HOOK ADAPTORS 9x4 5	6	7	7 x 2.5 1+B6	9 x 2,5 9 x 3 9 x 4 1+U10	KIT
DVF35	350mm 14"	●	●	●	●	●		●	●	
DVF38	380mm 15"	●	●	●	●	●		●	●	
DVF40	400mm 16"	●	●	●	●	●		●	●	
DVF43	430mm 17"	●	●	●	●	●		●	●	
DVF45	450mm 18"	●	●	●	●	●		●	●	133
DVF48	480mm 19"	●	●	●	●	●		●	●	
DVF50	500mm 20"	●	●	●	●	●		●	●	
DVF53	530mm 21"	●	●	●	●	●		●	●	
DVF55	550mm 22"	●	●	●	●	●	●	●	●	136
DVF58	580mm 23"	●	●	●	●	●		●	●	
DVF60	600mm 24"	●	●	●	●	●		●	●	133 136
DVF65	650mm 26"	●	●	●	●	●		●	●	133 136
DVF70	700mm 28"	●	●	●	●	●		●	●	
DVF75	750mm 28"	2S1	2S2	2S2	2S3					
DVF80	800mm 28"	2S1	2S2	2S2	2S3					

DURAVISION rear

WIPER BLADE		
DVr30	300mm	12"
DVr35	350mm	14"
DVr40	400mm	16"

NOTAS - NOTES - NOTIZEN - NOTE

NOTAS - NOTES - NOTIZEN - NOTE

NOTAS - NOTES - NOTIZEN - NOTE

ES

EL ESPECIALISTA
EN ESCOBILLAS LIMPIAPARABRISAS

La validez de la información respecto a las aplicaciones y especificaciones de los productos que figuran en catálogo están verificados en la fecha de impresión del mismo.

DOGA PARTS S.L.U. no asume ninguna responsabilidad derivada de las posibles modificaciones o sustituciones realizadas por los fabricantes de automóviles sobre dichas aplicaciones y/o especificaciones.

Las caracterísitcas técnicas de nuestros productos pueden evolucionar en cualquier momento para incorporar tanto mejoras técnicas, como tecnológicas.

Se prohíbe su publicación o reproducción de todo o parte de sus contenido sin la autorización de DOGA PARTS S.L.U.

EN

THE SPECIALIST
IN WIPER BLADES

Catalogue's information has been checked at the time of printing.

DOGA PARTS S.L.U. assumes no liability for any amendments or replacements made by car manufacturers on the applications and / or specifications.

The technical characteristics of our products may change at any time to incorporate both technical or technological improvements.

No part of this catalogue can be copied or reproduced without the autorization of DOGA PARTS S.L.U.

FR

LE SPÉCIALISTE
DE BALAIS ESSUIE-GLACE

La validité de l'information quant aux applications et spécifications des produits figurants dans notre catalogue sont vérifiés et actualisés à la date d'impression de ce dernier.

DOGA PARTS S.L.U. n'assume aucune responsabilité dérivée des possibles modifications ou substitutions réalisées par les fabricants automobiles sur les dires applications et/ou spécifications.

Les caractéristiques techniques de nos produits peuvent évoluer à n'importe quel moment, que ce soit améliorations techniques ou technologiques.

La copie, publication ou duplication de tout ou part de son contenu sans autorisation de DOGA PARTS S.L.U. est interdite.

EUROPE

DOGA, S.A. (headquarters)
Autovía A-2, Km. 583
08630 ABRERA
BARCELONA - (SPAIN)
Tel. +34 93 770 46 00
Fax +34 93 770 23 52
e-mail: doga@doga.es

DOGA Italia, S.R.L.
Regione Opessina, 44
14040 CASTELNUOVO CALCEA (AT) - (ITALY)
Tel. +39 0141 963000
Fax +39 0141 963001
e-mail: dogaitalia@dogaitalia.com

DOGA Parts, S.L.U.
Enclusa, 75
08292 ESPARREGUERA
BARCELONA - (SPAIN)
Tel. +34 93 777 88 55
Fax +34 93 777 88 54
e-mail: info@dogaparts.es
www.dogaparts.es

AZPIARAN DOGA POLSKA SP Z O O
Ul. Wroclawska, 36
55-020 Wojkowice Zórawina
(POLAND)
Tel. (+48) 717 224 221
Fax: (+48) 717 224 224

AMERICA

DOGA do Brasil, Ltda.
Rua Ibaiti, 111 - Vila Perneta - Cond. Portal da Serra
83325-060 PINHAIS - PARANÁ - (BRAZIL)
Tel. +55 41 3668 1513
Fax +55 41 3668 1988
e-mail: dogabrasil@doga.com.br

DOGA INMESA
COMPONENTES DE MÉXICO
Avda. Hércules 301-C, Bodega 8
Col. Polígono Industrial Santa Rosa
Km 21 Ctra. Querétaro a San Luis Potosí
Edo. Querétaro CP 76220 - (MÉXICO)
Tel. +52 (442) 291 14 24
e-mail: comercial@dogainmesa.com

DOGA USA, Corp.
12060 Raymond Court
Huntley - IL - 60142 - (USA)
Tel. +1 847 669 8529
Fax +1 847 669 8694
e-mail: dogausa@dogausa.com

ASIA

DOGA India, S.R.L.
#13, SNS Chambers 239
Sankey Road
BANGALORE 560 080 - (INDIA)
Phone 91-80-23614625 - 23615264
Fax 91-80-23610504
e-mail: dogaindia@dogaindia.com

DOGA NanTong Auto Parts Co., Ltd.
1 Xindong Road
NanTong Economic & Technology Development Area
226016 NANTONG - JIANGSU - (P.R.CHINA)
Tel. +86 513 8517 5166 - Fax +86 513 8517 5160
e-mail: doganantong@doganantong.com
道佳（南通）汽车零配件有限公司
中国江苏省南通经济技术开发区新东路1号 邮编:226016
电话:+86 513 8517 5166 - 传真:+86 513 8517 5160
电子邮件: doganantong@doga.es

DOGA

AUTOMOTIVE AFTERMARKET

VISIT OUR WEBSITE

www.dogaparts.es

TecDoc CERTIFIED DATA SUPPLIER

DOGA PARTS S.L.U.

C/ENCLUSA 75 • 08292
ESPARREGUERA • BARCELONA • (SPAIN)
Tel. +34 937 778 855 • Fax +34 937 778 854 • info@dogaparts.es