comer industries
gearboxes

COMPANY	REF.	DESIGNATION D-741 A
	DATE 10-03-2003	CODE 9.741.000.20

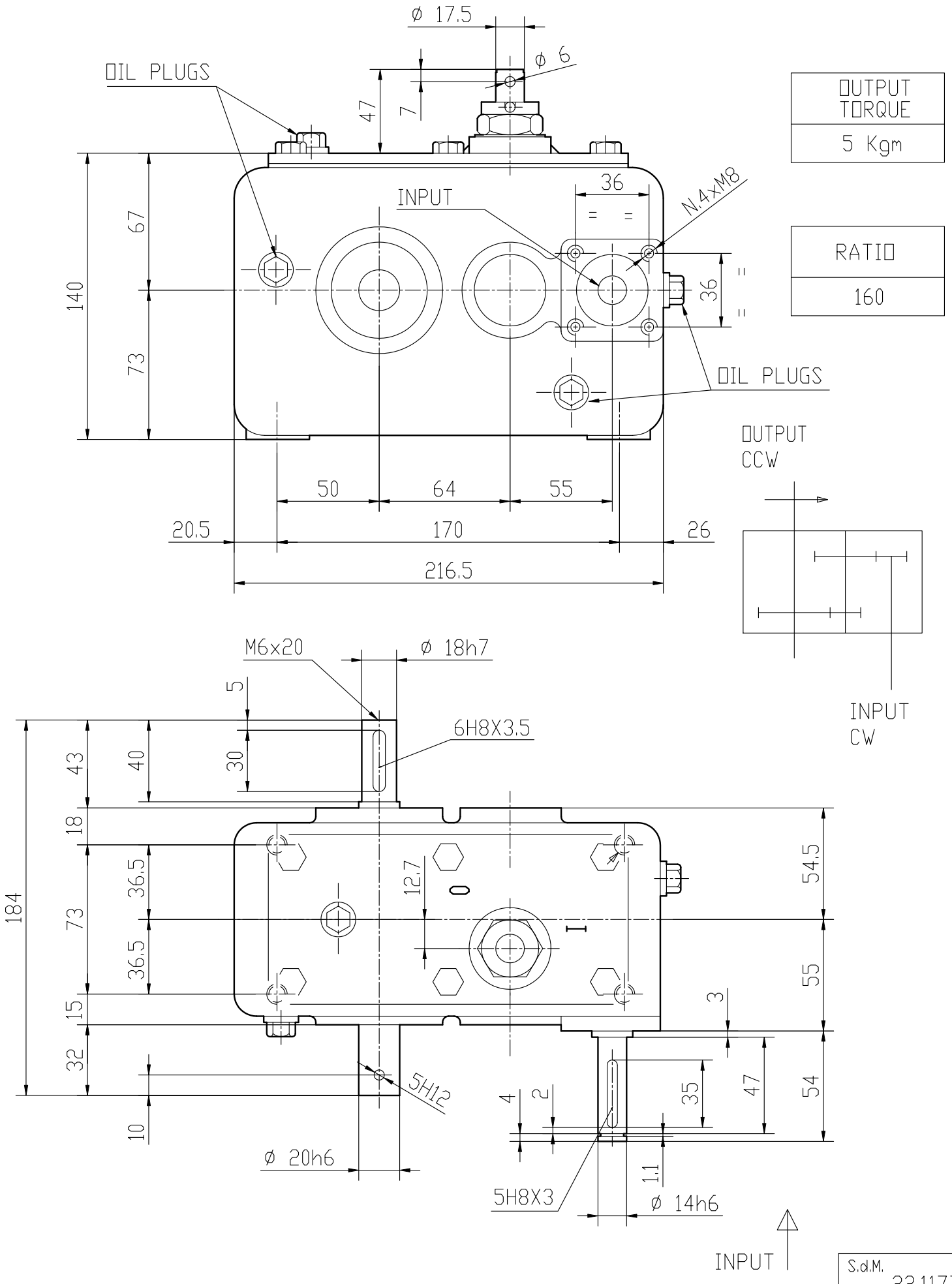

S.d.M. 22.11774

COMER INDUSTRIES S.p.A. 42046 Villanova di Reggiolo (R.E.) Italia Tel. 0522\974111 (9 Linee) Telefax 0522\973249