| | |
|---|---|
| <1> SAFETY CHARACTERISTICS | 0 |
| <2> SIGNIFICANT CHARACTERISTICS | 0 |
| <CI> CUSTOMER INTERFACE | 9 |

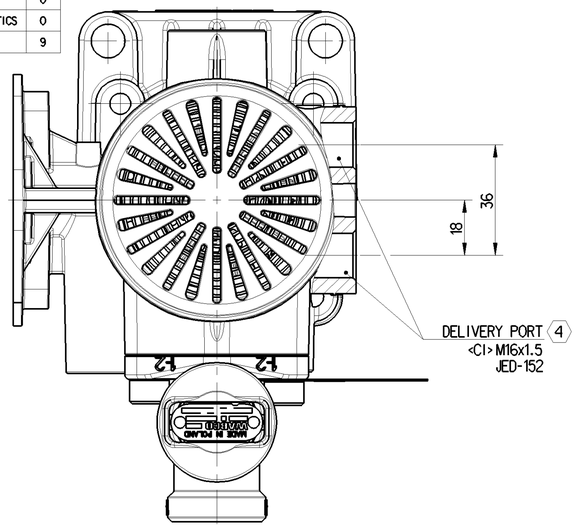


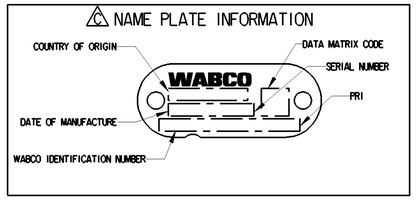


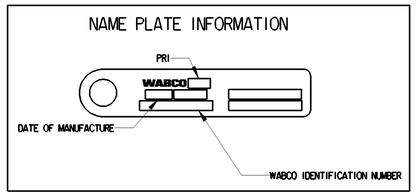


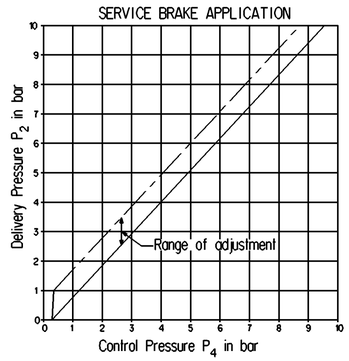


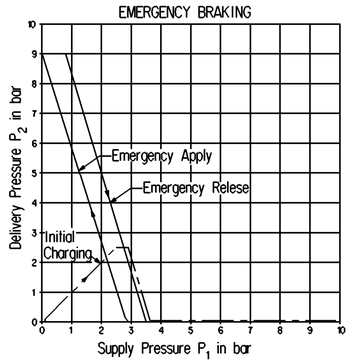


| | | |
|---|---|---|
| | WORKING MEDIUM | AIR |
| | THERMAL RANGE OF APPLICATION | -40° TO +65°C |
| | SHORT TERM RESISTANCE TO HEAT | MAX. 1h AT 110°C |
| | NOMINAL WORKING PRESSURE | 9 bar |
| | MAXIMUM WORKING PRESSURE | 10 bar |
| | PREDOMINANCE ADJUSTMENT RANGE PRESSURE | 0 TO 0.7 bar |
| | FILLING CRACK-OFF | 0.5 bar MAX. |
| | RELAY RATIO | >1 |
| | CRACK-OFF PRESSURE (WITHOUT PREDOM) | 0.3 bar MAX. ( +65°C TO -20°C)<br>0.35 bar MAX. (-20°C TO -40°C ) |
| | INSTALLATION POSITION | VERTICAL ±60° ALLOWED |
| PORT DESIGNATION | 1 | SUPPLY PORT |
| | 1-2 | RESERVOIR PORT |
| | 2 (3x) | DELIVERY PORT |
| | 4 | CONTROL PORT |
| | TIGHTENING TORQUE FOR MOUNTING BOLTS | 45±2 Nm |

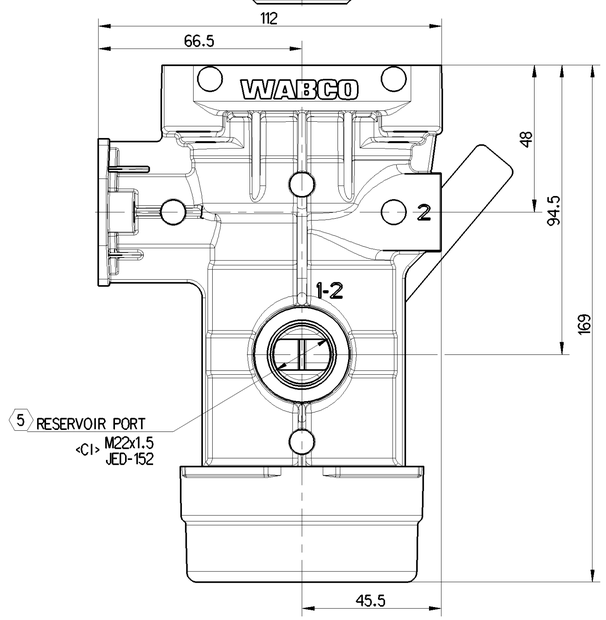


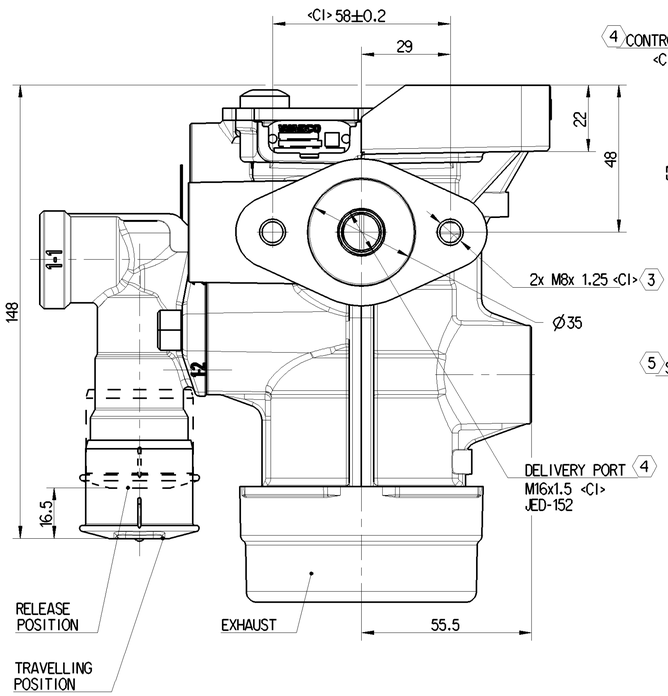


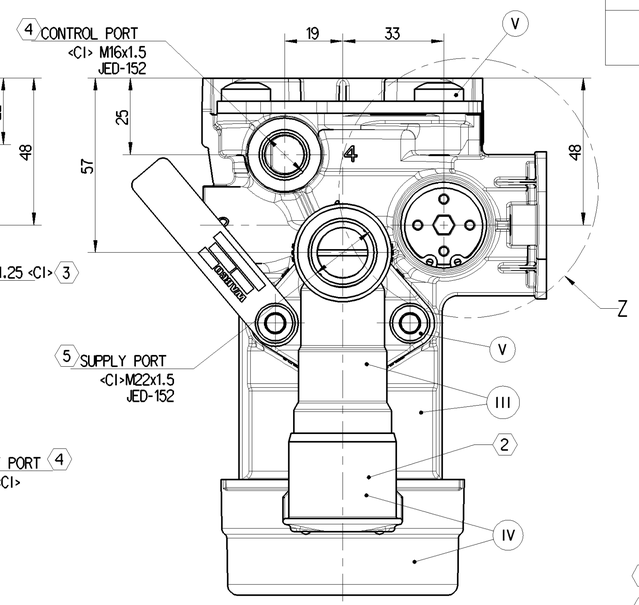


| CONDITION | FROM | TO | NOMINAL DIAMETER |
|---|---|---|---|
| FILLING | PORT 1 | PORT 1-2 | ≥10 mm |
| BRAKING | PORT 1-2 | PORT 2 | ≥11.5 mm |
| EXHAUSTING | PORT 2 | PORT 3 | ≥10.6 mm |

| PART CODE | MATERIAL | SURFACE PROTECTION |
|---|---|---|
| V | STEEL | ZINC NICKEL PLATED |
| IV | PLASTIC | NO TREATMENT |
| III | ALUMINIUM ALLOY | CHROMATED |
| II | STEEL | POWDER COATED |
| I | STEEL | ZINC PLATED |

NOTE:

1. PREDOMINANCE ADJUSTMENT
2. ATTACHMENT OF TRAILER RELEASE VALVE
3. ATTACHMENT OF LOAD SENSING VALVE
   RECOMMENDED TORQUE: 22±2 Nm

RECOMMENDED TORQUE FOR FITTINGS:

4. THREAD-M16x1.5, TIGHTENING TORQUE: 30 TO 35 Nm
5. THREAD-M22x1.5, TIGHTENING TORQUE: 34 TO 40 Nm

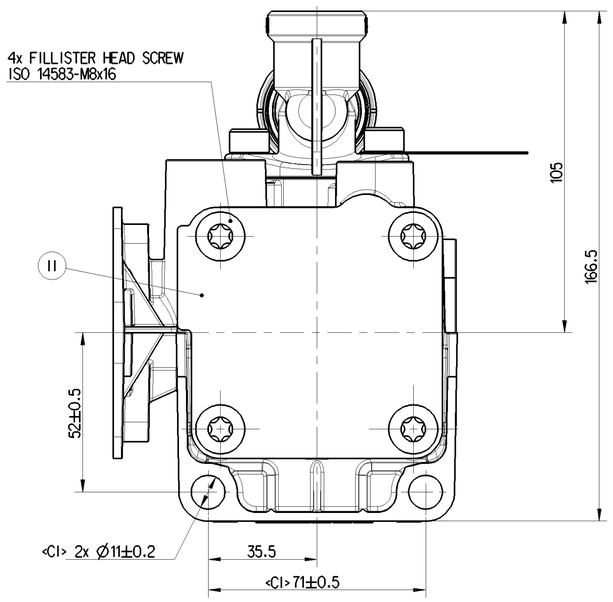


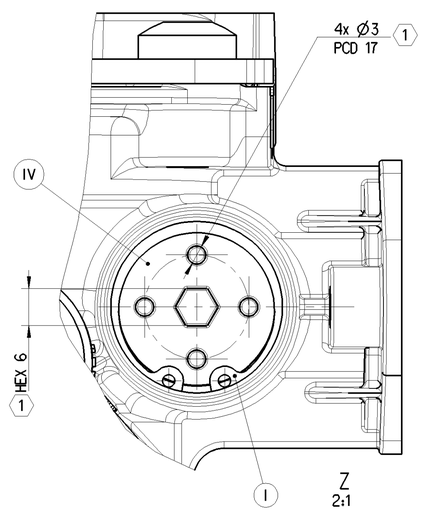


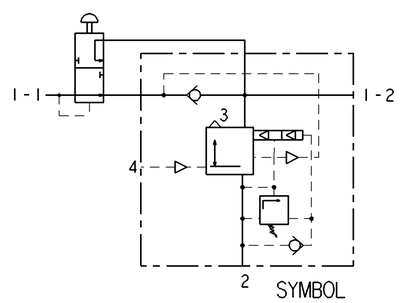


| | |
|---|---|
| General Specification: | JED-334-1 , Size ISO 14405 LP |
| Further Technical Data: | 971 002 049 0 |
| Doc. Code: 035 | Sheet: 1 To 56 |

General Tolerances JED-261

| Class 1) | Range of Nominal Dimensions ( ± mm) ≤ 50 | > 50 ≤ 180 | > 180 ≤ 400 | > 400 | ∢ |
|---|---|---|---|---|---|
| Fine | 0.5 | 1.0 | 1.5 | 2.0 | |
| Medium X | 1.0 | 2.0 | 3.0 | 4.0 | ±3° |
| Coarse | 2.0 | 3.5 | 5.0 | 6.5 | |

Tapped Holes acc. -

1) Tolerance Class Applied Crossmarked

Copyright WABCO®

| Date | Signature | |
|---|---|---|
| Drawn 2021-12-24 | Ponmurugaraj C | |
| Checked 2021-12-27 | Szyszka | |
| Expert Ponmurugaraj C | | |

WABCO

RELAY EMERGENCY VALVE
3 PORT WITH LSV FLANGE
ADD ON TRV

| Mass | Scale | Material No. | Date of first issue: 2019-08-19 | | |
|---|---|---|---|---|---|
| 1.392 KG | 1:1 2:1 | 971 002 032 0 | Doc.Code 005 | Language EN | Sheet 1/1 |
| Size A 1 | CAD System CREO | EDM-No. 509838 | Revision 1x C | Techn. Resp. 5251 | Replacement for - |

100mm

Toute Communication ou reproduction de ce document, toute exploitation ou communication de son contenu sont interdites, sauf autorisation écrite préalable. Tous droits de propriété industrielle réservés, notamment en matière de brevets et de modèles.

Weitergabe sowie Vervielfältigung dieser Unterlage, Verwertung und Mitteilung ihres Inhalts nicht gestattet, soweit nicht ausdrücklich zugestanden. Zuwiderhandlungen verpflichten zu Schadensersatz. Alle Rechte für den Fall der Patenterteilung oder Gebrauchsmustereintragung vorbehalten.

Non è permesso consegnare a terzi o riprodurre questo documento, né utilizzarne il contenuto o renderlo comunque noto a terzi senza autorizzazione scritta. Tutti i diritti di proprietà industriale sono riservati, in particolare i diritti derivanti da brevetti o modelli.

Copying of this document and giving it to others and the use or communication of the contents thereof, are forbidden without express authority. Offenders are liable to the payment of damages. All rights are reserved in the event of the grant of patent or registration of a utility model or design. This document is the subject of copyright.