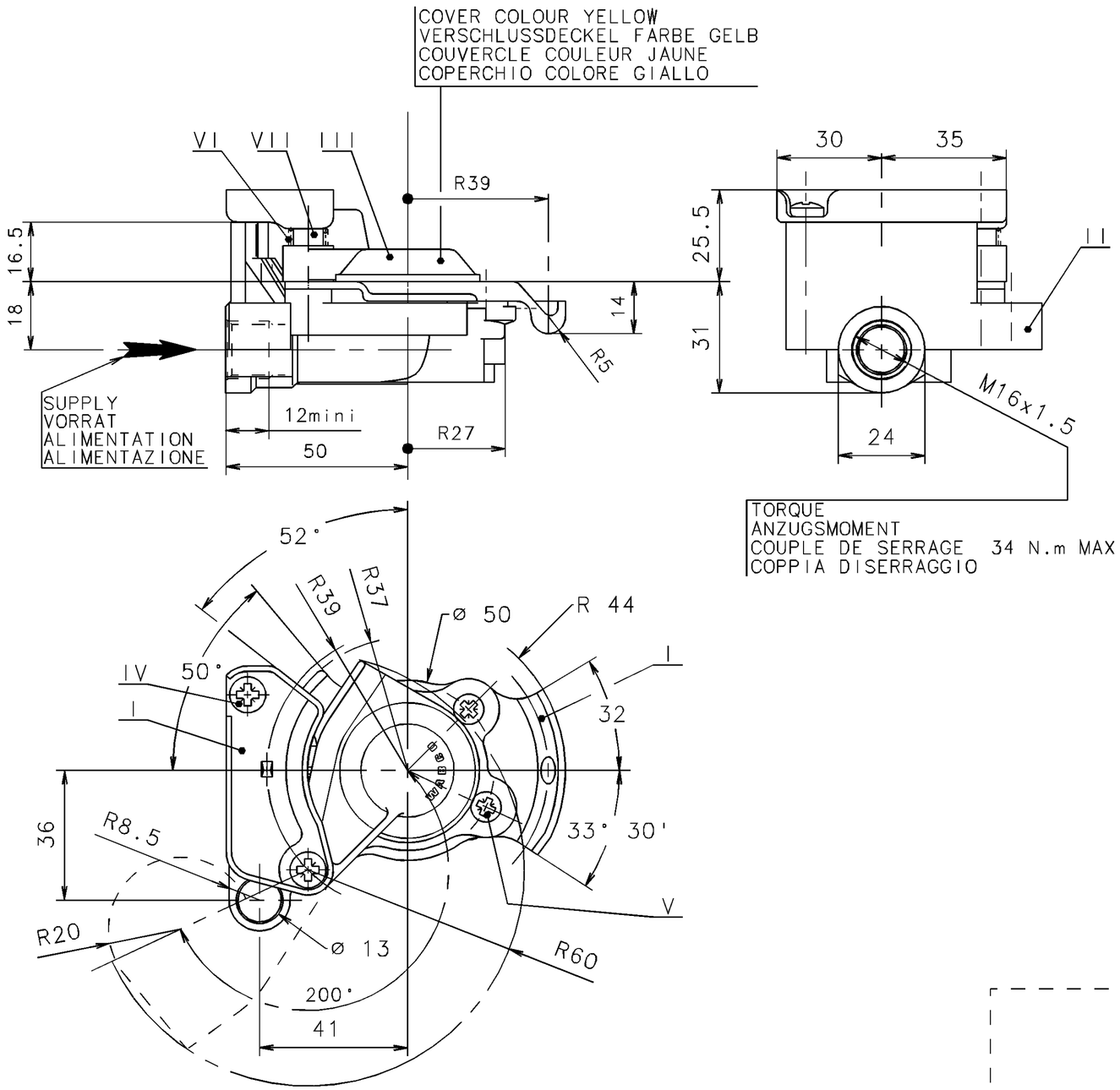

CHARACTERISTICS
TECHNISCHEN DATEN
CARACTERISTIQUES
CARATTERISTICHES

DESIGNATION BEZEICHNUNG DESIGNATION DESIGNAZIONE	SYMBOL SYMBOL SYMBOLE SIMBOLO	UNIT EINHEIT UNITE UNITA	VALUE WERT VALEUR VALORE
WORKING TEMPERATURE THERMISCHER ARBEITSBEREICH TEMPERATURE DE FONCTIONNEMENT TEMPERAUTURA DI UTILIZZAZIONE	T	°C	-40° +80°
MAX INLET PRESSURE MAX BETRIEBSDRUCK PRESSION D'ALIMENTATION MAXI PRESSIONE MASSIMA D'ALIMENTAZIONE	P	BAR	10
WORKING POSITION EINBAULAGE POSITION DE FONCTIONNEMENT POSIZIONE DE FUNZIONAMENTO	UNIMPORTANT BELIEBIG INDIFFERENTE INDIFFERENTE		
FLUID MEDIUM FLUIDE FLUIDO	AIR PRESSURE DRUCKLUFT AIR COMPRIME ARIA COMPRESSA		
NORM NORM NORME NORMA ISO 1728	SERVICE BRAKING BETRIEBSBREMSUNG FREINAGE DIRECT FRENO MODERABILE		

	MATERIAL	SURFACE PROTECTION
I	JED 021M3/Fe	JED 256
II	JED 029M3/Al	X
III	PP	X
IV	JED 051M4/Fe	JED 256
V	JED 051M2/Fe	JED 256
VI	JED 064M /Fe	JED 258
VII	JED 021M1/Fe	JED 256

FURTHER TECHNICAL DATA SEE

IDENTIFICATION NO.:

CODE FOR DOCUMENT: 605 SHEET: TO

GENERAL TOLERANCES

CLASS	1)	RANGE OF NOMINAL DIMENSIONS (± mm) ≤50	>50 ≤180	>180 ≤400	>400	∡
I		0,5	1,0	1,5	2,0	± 3°
II		1,0	2,0	3,0	4,0	
III	X	2,0	3,5	5,0	6,5	

TAPPED HOLES ACC. ISO 4039 / JED-152

1) TOLERANCE CLASS APPLIED CROSSMARKED

DCN-NO.	REV.	DATE
95178	L	
	K	25-07-95
	J	
	H	
	G	
	F	
	E	
	D	
	C	
	B	
	A	

100mm

COPYRIGHT

DATE SIGNATURE

DRAWN 25-07-95 GERONIMI

CHECKED 25-07-95 HAIMART

STANDARDIZATION

WABCO

HOSE COUPLING
KUPPLUNGSKOPF
TETE D'ACCOUPLEMENT
TESTA D'ACCOPIAMENTO

MASS	SCALE	PRODUCT IDENTIFICATION NO.	CODE FOR DOCUMENT	SHEET
0.22 kg	1:1	952 200 022 0	605	1/1
SIZE A 2	T.R.I. 210	CODE F.PROD.-GROUP 571	CODE FOR SHAPE	REPLACEMENT FOR DRAWING OF 87-09-08

EXPERT CODE TYPE OF PRODUCT

TOUTE COMMUNICATION OU REPRODUCTION DE CE DOCUMENT, TOUTE EXPLOITATION OU COMMUNICATION DE SON CONTENU SONT INTERDITES, SAUF AUTORISATION EXPRESSE. TOUT MANQUEMENT À CETTE REGLE CONSTITUE UN ABUS EVIDENT ET EXPOSE SON AUTEUR AU VERSEMENT DE DOMMAGES ET INTERETS. TOUS DROITS DE PROPRIETE INDUSTRIELLE RESERVES, NOTAMMENT EN MATIERE DE BREVETS ET DE MODELES.

WEITERGABE SOWIE VERVIELFÄLTIGUNG DIESER UNTERLAGE, VERWERTUNG UND MITTEILUNG IHRES INHALTS NICHT GESTATTET, SOWEIT NICHT AUSDRÜCKLICH ZUGESTANDEN. ZUWIDERHANDLUNGEN STELLEN EINEN OFFENSICHTLICHEN MISSBRAUCH DAR UND VERPFLICHTEN ZU SCHADENERSATZ. ALLE RECHTE FÜR DEN FALL DER PATENTERTEILUNG ODER GEBRAUCHSMUSTER - EINTRAGUNG VORBEHALTEN.

NON E PERMESSO CONSEGNARE A TERZI O RIPRODURRE QUESTO DOCUMENTO, NE UTILIZZARNE IL CONTENUTO O RENDERLO COMUNQUE NOTO A TERZI SENZA AUTORIZZAZIONE ESPLICITA. OGNI INFRAZIONE COSTITUIRA UN EVIDENTE ABUSO E COMPORTERA IL RISARCIMENTO DEI DANNI SUBITI. E' FATTA RISERVA DI TUTTI I DIRITTI DERIVANTI DABREVETTI O MODELLI.

COPYING OF THIS DOCUMENT, AND GIVING IT TO OTHERS AND THE USE OR COMMUNICATION OF THE CONTENTS THEREOF, ARE FORBIDDEN WITHOUT EXPRESS AUTHORITY. CONTRAVENTION OF THIS RESTRICTION WILL CONSTITUTE AN EVIDENT ABUSE AND RESULT IN A LIABILITY TO THE PAYMENT OF DAMAGES. ALL RIGHTS ARE RESERVED IN THE EVENT OF THE GRANT OF A PATENT OR THE REGISTRATION OF AN UTILITY MODEL OR DESIGN.

THIS DRAWING IS SUBJECT TO COPYRIGHT.

86-01