COMPANY	REF.	DESIGNATION K-799 A
	DATE 10-10-2010	CODE 9.799.106.00

comer industries
gearboxes

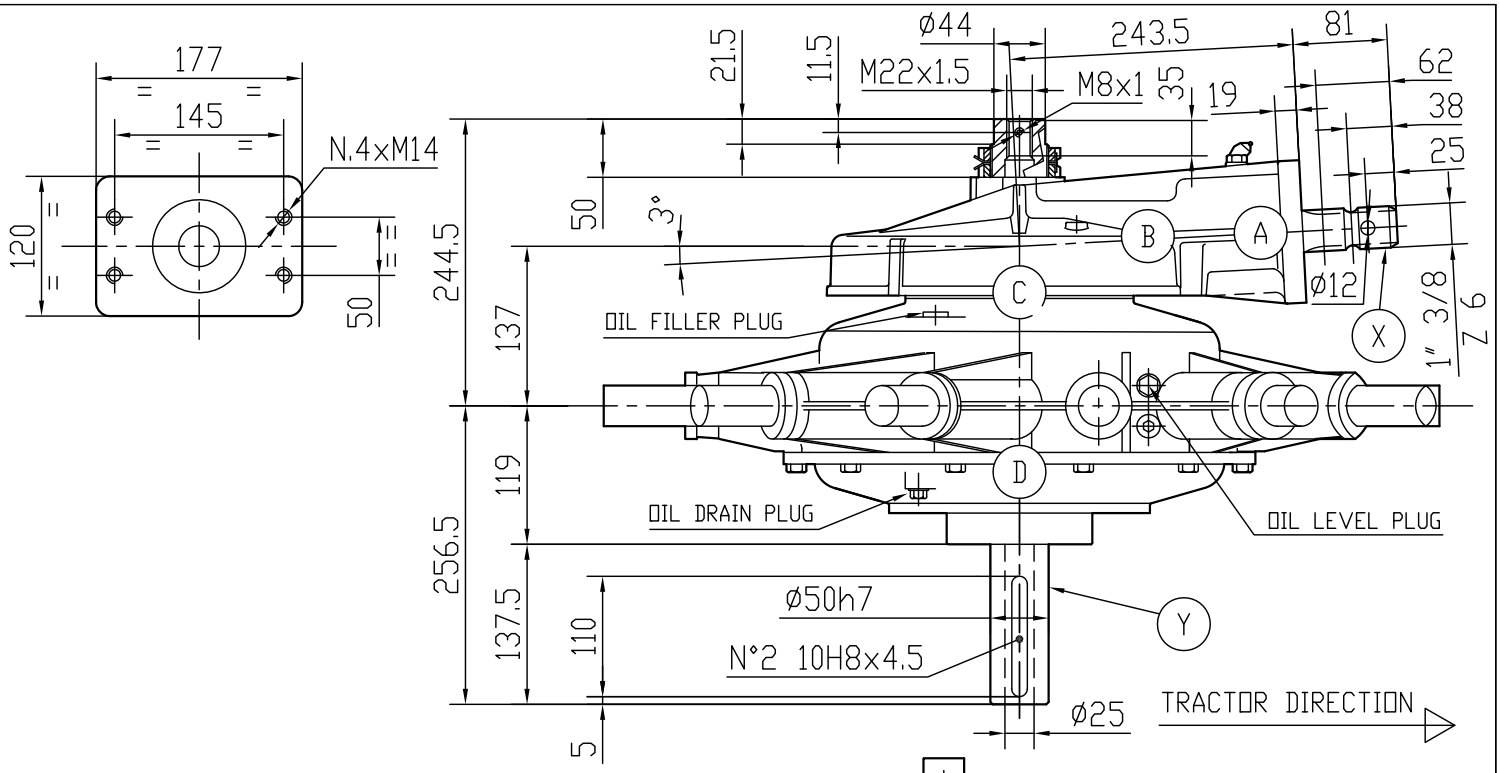

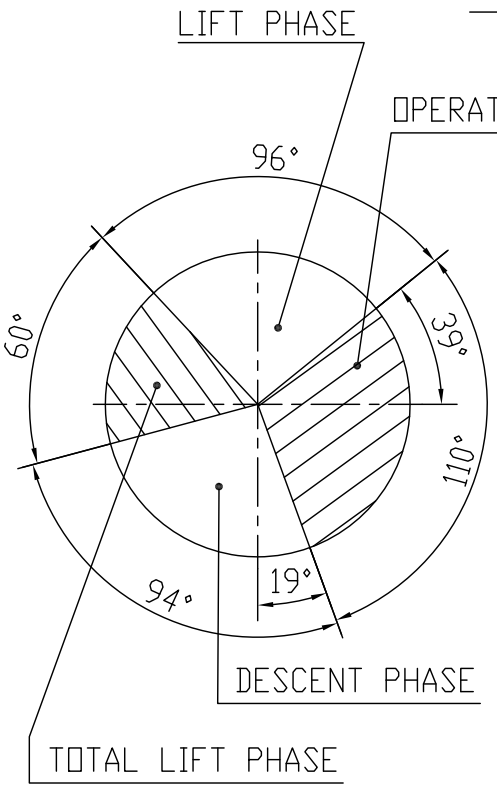

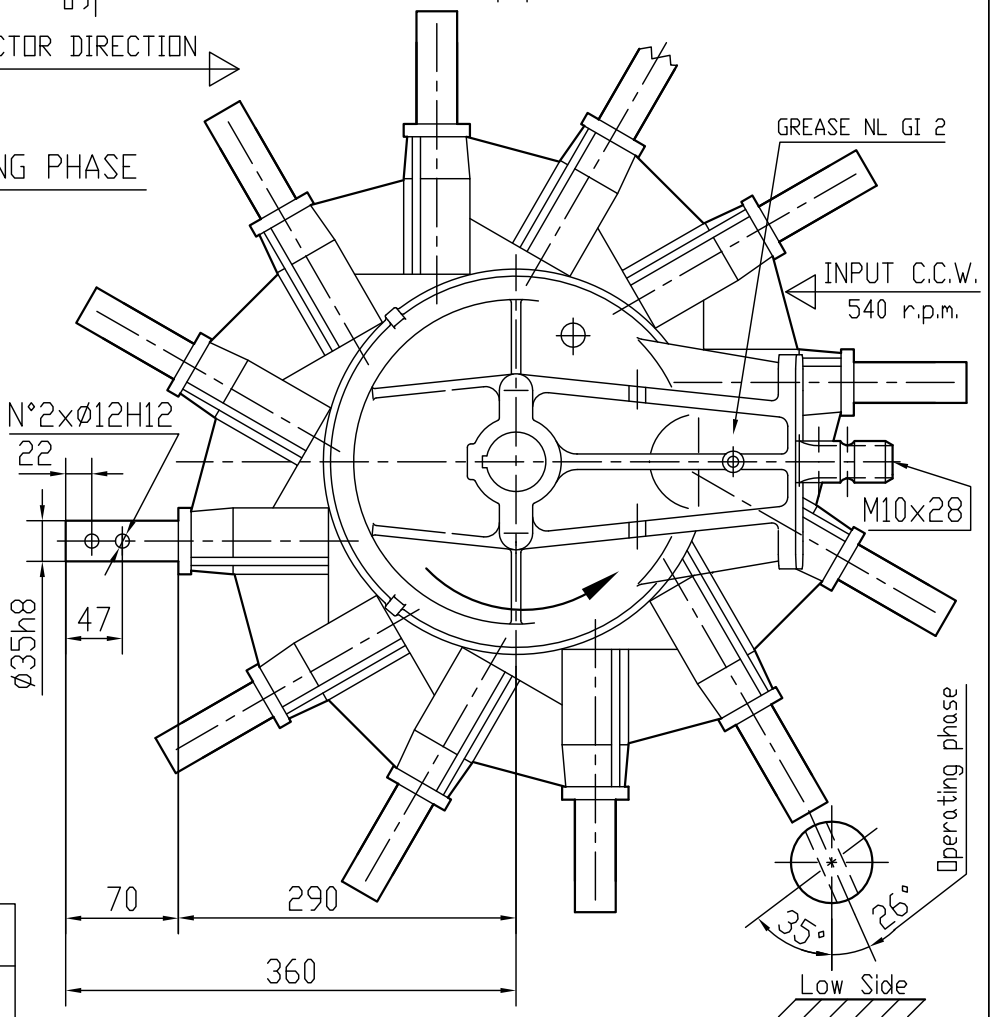

SHAFT-X-MAT.18NiCrMo5
SHAFT-Y-MAT. 20 MnCr5

RATIO	INPUT TORQUE	BEVEL GEARS	LUBRICANT
8.1 : 1	DaNm 21	Z.10 Z.81 M.3.8	SAE.90EP

POS.	BEARING
A	30208
B	30208
C	6310 Z
D	6310

S.d.M. 01.11906

COMER S.p.A. 42046 Villanova di Reggiolo (R.E.) Italia Tel. 0522\974111 (9 Linee) Telefax 0522\973249 Telex 530252 COMEX I