| comer industries gearboxes | COMPANY | REF. | DESIGNATION A-1 B |
|---|---|---|---|
| | | DATE 09-12-2009 | CODE 9.600.005.20 |

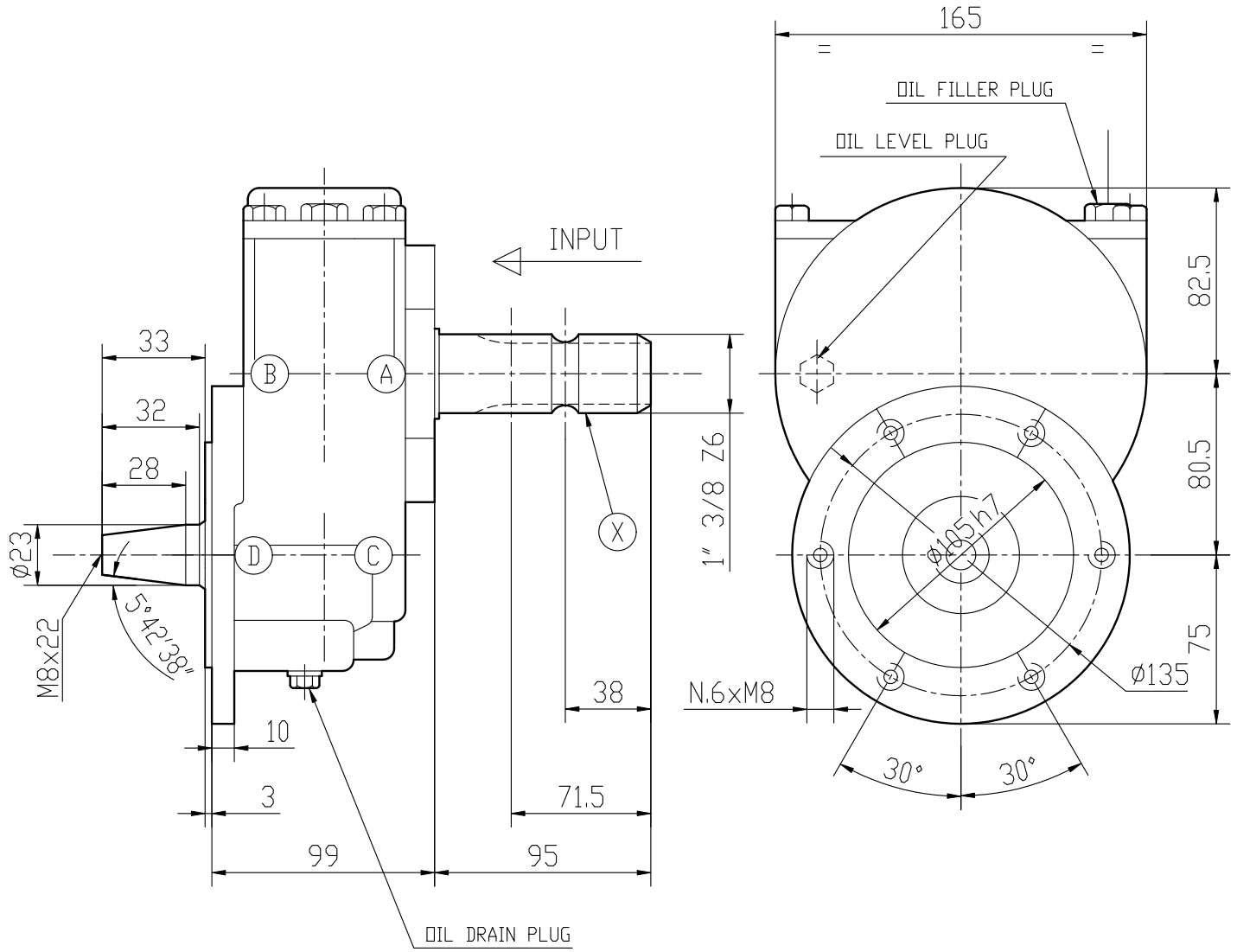


10 KVA

S.d.M. 20.10283

SPEED INCREASING UNIT

| Ratio i | Rated input r.p.m. | Rated input power HP | Rated input power kW | Rated output torque da Nm | Weight Kg | Lubricant Oil ☒ Type | Lubricant Grease ☐ Quantity Lt. |
|---|---|---|---|---|---|---|---|
| 1 : 7 | 428 | --- | --- | 2.5 | 11 | SAE.90EP | 0.5 |

| Gear Arrangement | Bevel couplings | | | | | | | Cylindrical couplings | | | | | | |
|---|---|---|---|---|---|---|---|---|---|---|---|---|---|---|
| | Helicoidal | Straight | Teeth number Z 1 | Z 2 | Z 3 | Z 4 | Module M. | Helicoidal | Straight | Teeth number Z 1 | Z 2 | Z 3 | Z 4 | Module M. |
| In. | | | | | | | | ✳ | | 11 | 77 | | | 1.75 |
| | | | | | | | | | | | | | | |
| | | | | | | | | | | | | | | |

| Bearings | |
|---|---|
| A | 6008 |
| B | 6008 |
| C | 6303 |
| D | 6205 |
| E | |
| F | |
| G | |
| H | |

Components material

| Casing | Shaft X | Shaft Z | Bevel gear | Spur gear |
|---|---|---|---|---|
| G 25 UNI 5007 | C 40 BONIFICATO | 16 CrNi4 | | 16 CrNi4 |

COMER INDUSTRIES reserves the right to make any change to this product without prior public acknowledgement

COMER INDUSTRIES S.p.A. 42046 Villanova di Reggiolo (R.E.) Italia Tel. 0522\974111 (9 Linee) Telefax 0522\973249