COMPANY	REF.	DESIGNATION
		K-792 A
	DATE	CODE
	10-10-2015	9.792.401.20

S.d.M. 21.11906

RIGHT VERSION

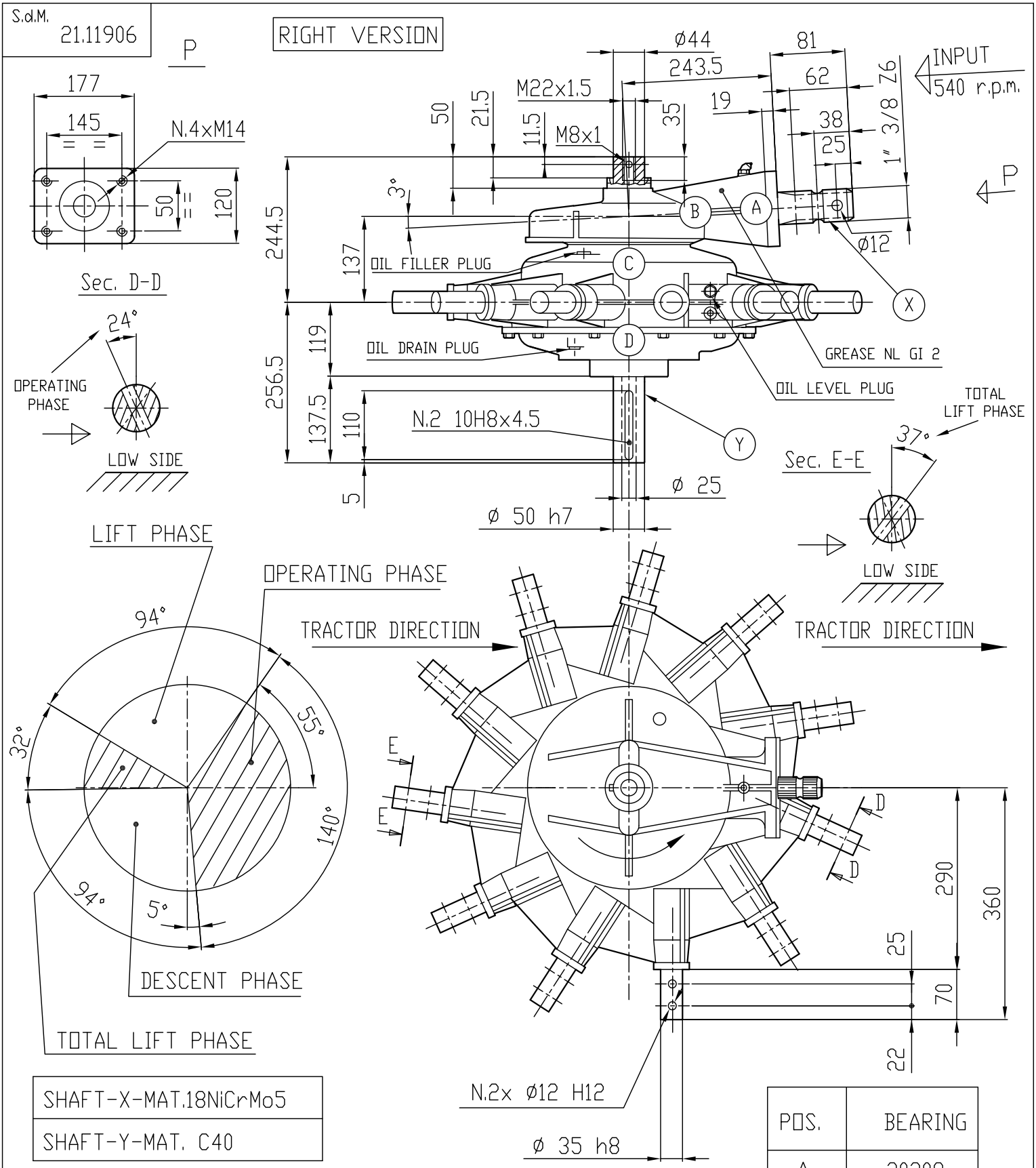

SHAFT-X-MAT.18NiCrMo5	
SHAFT-Y-MAT. C40	

POS.	BEARING
A	30208
B	30208
C	6310 Z
D	6310

RATIO	RATED INPUT TORQUE	BEVEL COUPLINGS	LUBRICANT
8.2 : 1	DaNm 21	Z.10 Z.82 M.3.75	SAE.90EP 6.2 lt.

COMER INDUSTRIES S.p.A. 42046 Villanova di Reggiolo (R.E.) Italia Tel. 0522\974111 (9 Linee) Telefax 0522\973249