SURFACE PROTECT./OBERFL. SCHUTZ	
I	JED-240-3
II	JED-256-1
III	JED-371
IV	JED-240-2 Ⓓ

14 f8 $^{-0.016}_{-0.043}$

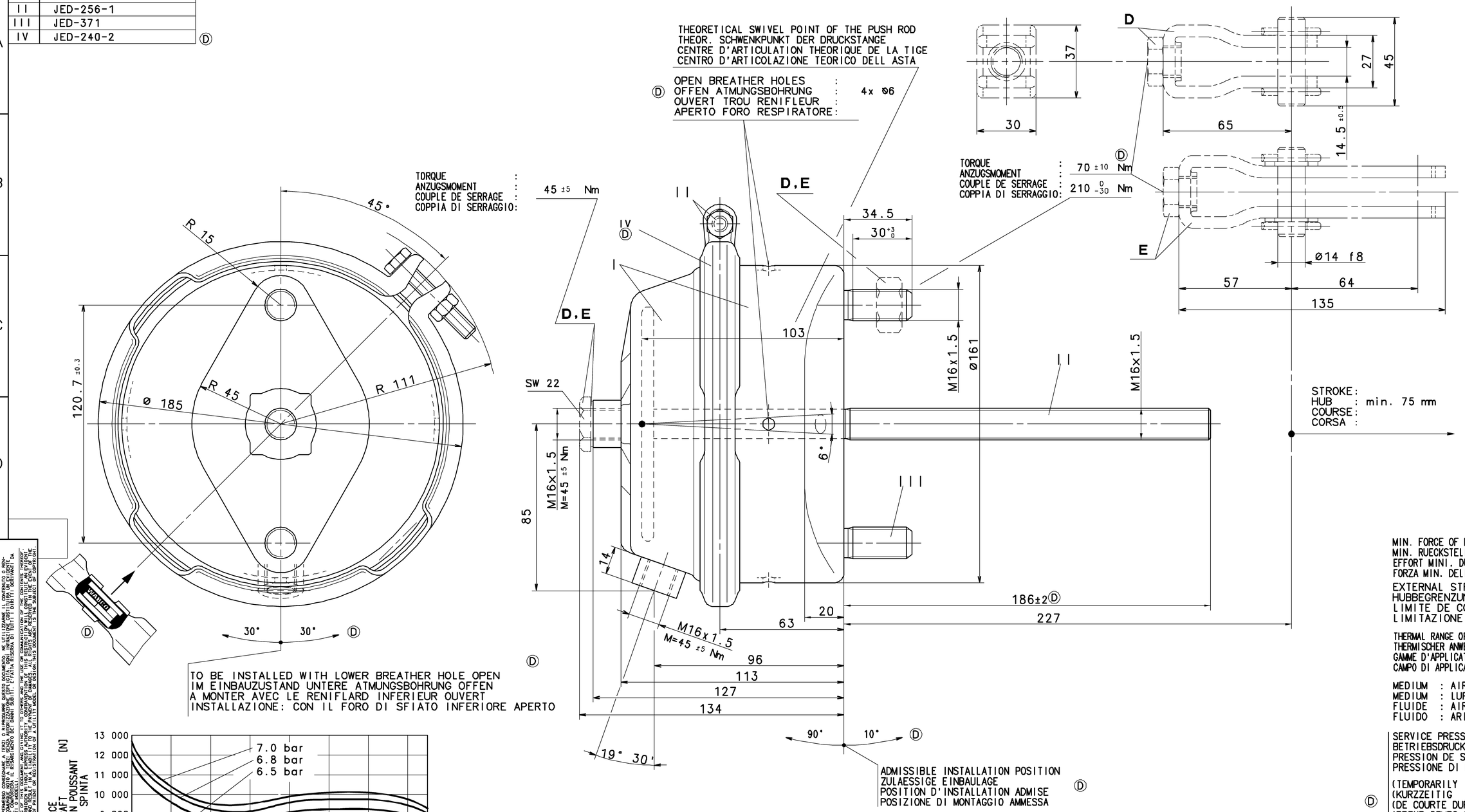

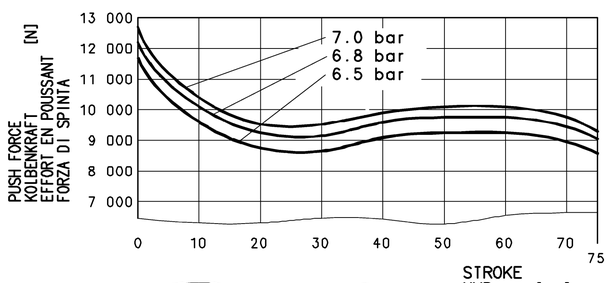

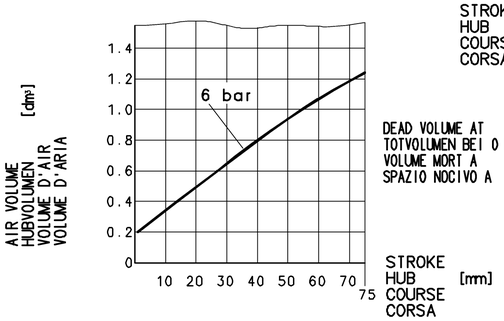

DEAD VOLUME AT
TOTVOLUMEN BEI 0 bar:=0.076 dm³
VOLUME MORT A
SPAZIO NOCIVO A

MIN. FORCE OF RETURN SPRING :
MIN. RUECKSTELLKRAFT DER FEDER :150 N
EFFORT MINI. DU RESSORT DE RAPPEL :
FORZA MIN. DELLA MOLLA RITORNO : Ⓓ

EXTERNAL STROKE LIMIT
HUBBEGRENZUNG EXTERN
LIMITE DE COURSE EXTERNE
LIMITAZIONE DI CORSA ESTERNO

THERMAL RANGE OF APPLICATION :
THERMISCHER ANWENDUNGSBEREICH : -40 °C..+80 °C
GAMME D'APPLICATION THERMIQUE :
CAMPO DI APPLICAZIONE TERMICA :

MEDIUM : AIR
MEDIUM : LUFT
FLUIDE : AIR
FLUIDO : ARIA

SERVICE PRESSURE :
BETRIEBSDRUCK : Pe max.= 8.5 bar
PRESSION DE SERVICE :
PRESSIONE DI ESERCIZIO :

Ⓓ (TEMPORARILY :
(KURZZEITIG : Pe max.= 10 bar)
(DE COURTE DUREE :
(BREVE TEMPO SOLO :

BY-PACKING :	D	423 000 534 2	ON SPECIAL ORDER ONLY
BEIPACK :			NUR AUF BESTELLUNG
PAQUET JOINT :	E	423 000 535 2	SUR COMMANDE SEULEMENT
PACKO RIUNCHIUSO:			SU ORDINAZIONE SOLAMENTE

GENERAL SPECIFICATION: JED-334						
FURTHER TECHNICAL DATA:						
DOC. CODE:	SHEET: 10					
GENERAL TOLERANCES						
CLASS 1)	RANGE OF NOMINAL DIMENSIONS (± mm) ≤50	> 50 ≤180	>180 ≤400	>400		
FINE	0,5	1,0	1,5	2,0		
MEDIUM X	1,0	2,0	3,0	4,0	± 3°	
COARSE	2,0	3,5	5,0	6,5		
TAPPED HOLES ACC. ISO 4039 / JED-152						
1) TOLERANCE CLASS APPLIED CROSSMARKED						

DON-ND.	REV.	DATE
112263	15xD	07-01-31
075375	2xC	00-05-29
072655	4xB	99-10-06
067317	1xA	98-05-29

CADAM-DRAWING COPYRIGHT

DATE	SIGNATURE
DRAWN: 94-11-07	Mueller
CHECKED: 94-11-07	Rischer
STANDARDIZATION: 94-11-07	Pantzer

WABCO

BRAKE CHAMBER 24
MEMBRANZYLINDER
VASE A DIAPHRAGME
BRAKE CHAMBER

MASS	SCALE	PRODUCT IDENTIFICATION NO.	DOC. CODE	SHEET
3.0 Kg	1:1	423 106 900 0	605	1/1
SIZE A 1	T.R.I. 529	SHAPE CODE	REPLACEMENT FOR	

100mm

EXPERT CODE 8 1 5 Ⓓ

PRODUCT TYPE

1000/016/3/04-83

605/633

TOUTE COMMUNICATION OU REPRODUCTION DE CE DOCUMENT, TOUTE EXPLOITATION OU COMMUNICATION DE SON CONTENU OU DE PARTIES DE CELUI-CI SONT INTERDITES SAUF AUTORISATION ECRITE. TOUS DROITS DE PROPRIETE INTELLECTUELLE ET INDUSTRIELLE, SOUS RESERVE DE TOUTE MODIFICATION ET DE TOUTE ATTRIBUTION DE BREVET.
WEITERGABE SOWIE VERVIELFAELTIGUNG DIESER UNTERLAGE, VERWERTUNG UND MITTEILUNG IHRES INHALTS NICHT GESTATTET, SOWEIT NICHT AUSDRUECKLICH GESTATTET. ZUWIDERHANDLUNGEN VERPFLICHTEN ZU SCHADENSERSATZ. ALLE RECHTE FUER DEN FALL DER PATENTERTEILUNG ODER EINTRAGUNG VON GEBRAUCHSMUSTERN VORBEHALTEN.
NON È PERMESSO CONSEGNARE A TERZI O RIPRODURRE QUESTO DOCUMENTO, NE UTILIZZARNE IL CONTENUTO O RENDERNE ESPLICITE PARTI SENZA AUTORIZZAZIONE SCRITTA. TUTTI I DIRITTI DI PROPRIETÀ INTELLETTUALE E INDUSTRIALE, SALVO MODIFICHE TECNICHE E RISERVA DI TUTTI I BREVETTI DA ADEGUARE O CONCEDERE.
COPYING OF THIS DOCUMENT AND GIVING IT TO OTHERS AND THE USE OF COMMUNICATION OF THE CONTENTS THEREOF ARE FORBIDDEN WITHOUT EXPRESS AUTHORITY. OFFENDERS ARE LIABLE TO THE PAYMENT OF DAMAGES. ALL RIGHTS ARE RESERVED IN THE EVENT OF THE GRANT OF A PATENT OR REGISTRATION OF A UTILITY MODEL OR DESIGN. THIS DOCUMENT IS THE SUBJECT OF COPYRIGHT.