MixRite 3.5 1%-10%, On/Off ,CL, LFR

2830101CL00

12/10/2015

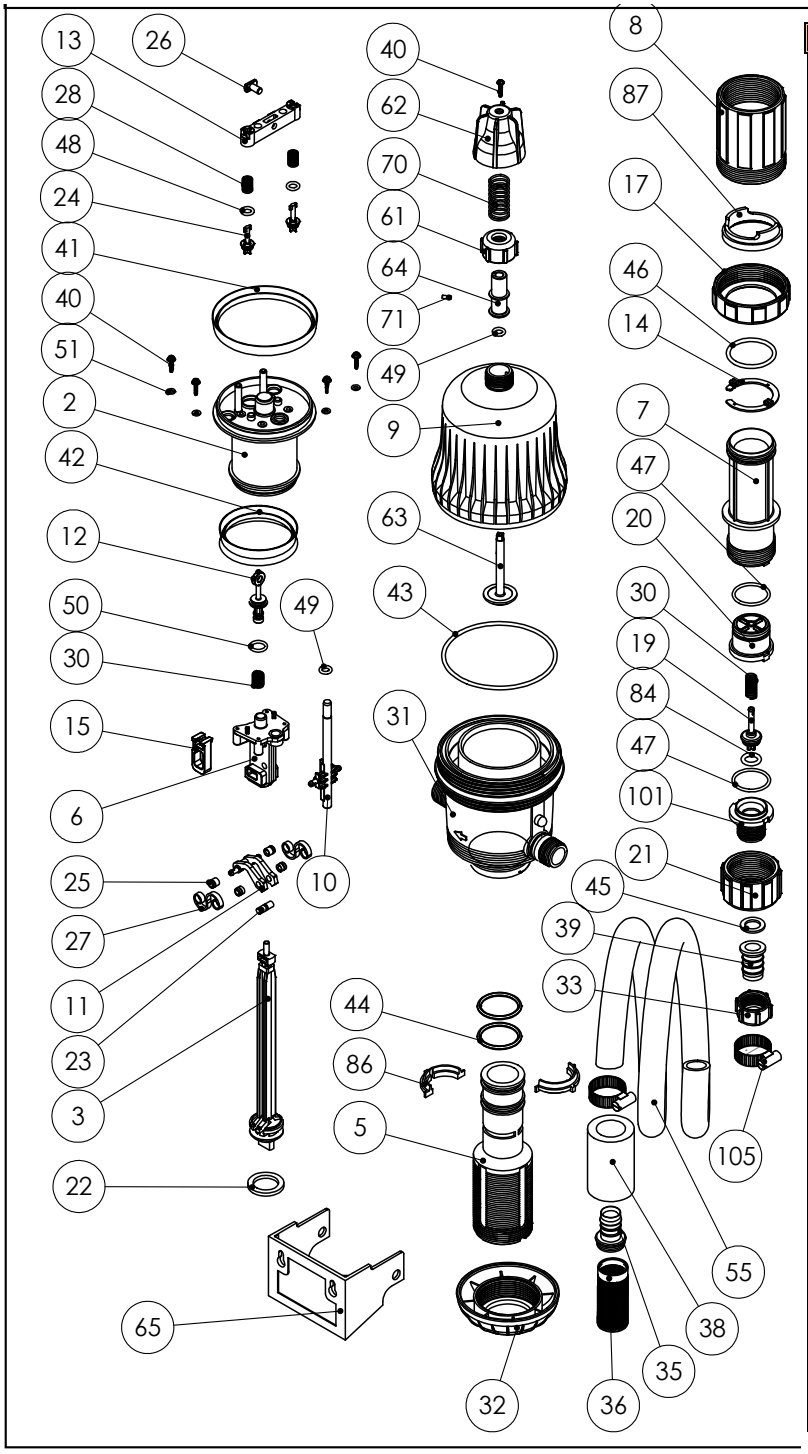

No.	Part	Cat. No
2	PISTON 100/70 DUAL SEAL	36016003102
3	BAR PISTON 10%	36314103103
4		
5	CYLINDER SUPPORT 10%	36030010305
6	FEMALE INSIDE BASE	36309031106
7	CYLINDER 10%	36030162207
8	ADJUSTMENT SLEEVE PURPLE	36030181508
9	COVER	36301001309
10	EJECTOR PIN	36371002110
11	TOGGLE	36318001111
12	VALVE 1	36030147712
13	VALVE BRIDGE	36030147513
14	CLIP 10%	36319101167
15	TOGGLE FRAME	36030149915
16		
17	PROPOTIONER NUT 10%	36030162217
18		
19	CHECK VALVE PIN -NEW	36061003236
20	CHECK VALVE GUIDE -NEW	35204003202
21	CHECK VALVE NUT 10%	36030622100
22	SUCTION SEAL 10% IL	36000031022
23	AXLE	36030162523
24	VALVE 2	36030153124
25	SLIDE	36030167125
26	PIN	36030167026
27	PLASTIC SPRING	36001018227
28	SPRING 2 HSTY	38060797528
29		
30	HSTY SPRING FOR C. VALVE-NEW	38028113529
31	BODY WIDE DRILL	36030162231
32	CYLUNDER SUPPORT NUT	36030161532
33	NUT 3/4" HOLE 20MM	36030120033
34		
35	HOSE COVER 19 MM	36030111935
36	SUCTION FILTER	36030013036
37		
38	FILTER CERAMIC WEIGHT	38000000038
39	BODY FOR RECORD 3/4"	32454759122
40	STAINLESS STEEL SCREW	38060351640
41	SEAL 101 MIX 3	36330172241
42	PISTON LOWER DUAL SEAL	36089002242
43	O RING 2-243 PO	38022430243
44	O RING 34*4 VITON	38003441244
45	WASHER FOR SWIVEL 3/4"	37245581200
46	O RING 2-223 VITON	38022231246
47	O RING 30*3 AFLAS	38003035246
48	O RING 2-108 VITON	38021080048
49	O RING 2-109 VITON	38021090049
50	O RING 10*3 VITON	38001031250
51	STAINLESS STEEL DISC	38060351641
55	SUCTION TUBE 19MM	36030001955
56		
57		
60		
61	3/4" NUT	36030167521
62	ON/OFF HANDLE	36030208862
63	ON/OFF ROD	36030208863
64	ON/OFF TUBE	36030208864
65	MOUNTING BRACKET	36030162765
66		
70	ON/OFF SPRING	38060208870
71	BIT	38060208871
76		
84	O RING 2-206 AFLAS	38022065284
86	ARC LOCK FOR NUT	36019063278
87	ADJUSTMENT NUT ADAPTOR	36019013376
101	CHECK VALVE SEAT -NEW	35204003201
105	SST CLIP W. SCREW	38013322102

TEFEN
FLOW & DOSING TECHNOLOGIES

TEFEN Manufacture & Marketing Plastic Products (1990) LTD. Kibutz Nahsholim 3081500 Israel
| Tel. 972 4 6395554 | Fax. 972 4 6390813 | export@tefentech.com | www.tefentech.com