WALTERSCHEID

PRODUCT INFO

PTO GUARD ST15

ST15 Guard - Components for Series W and WW

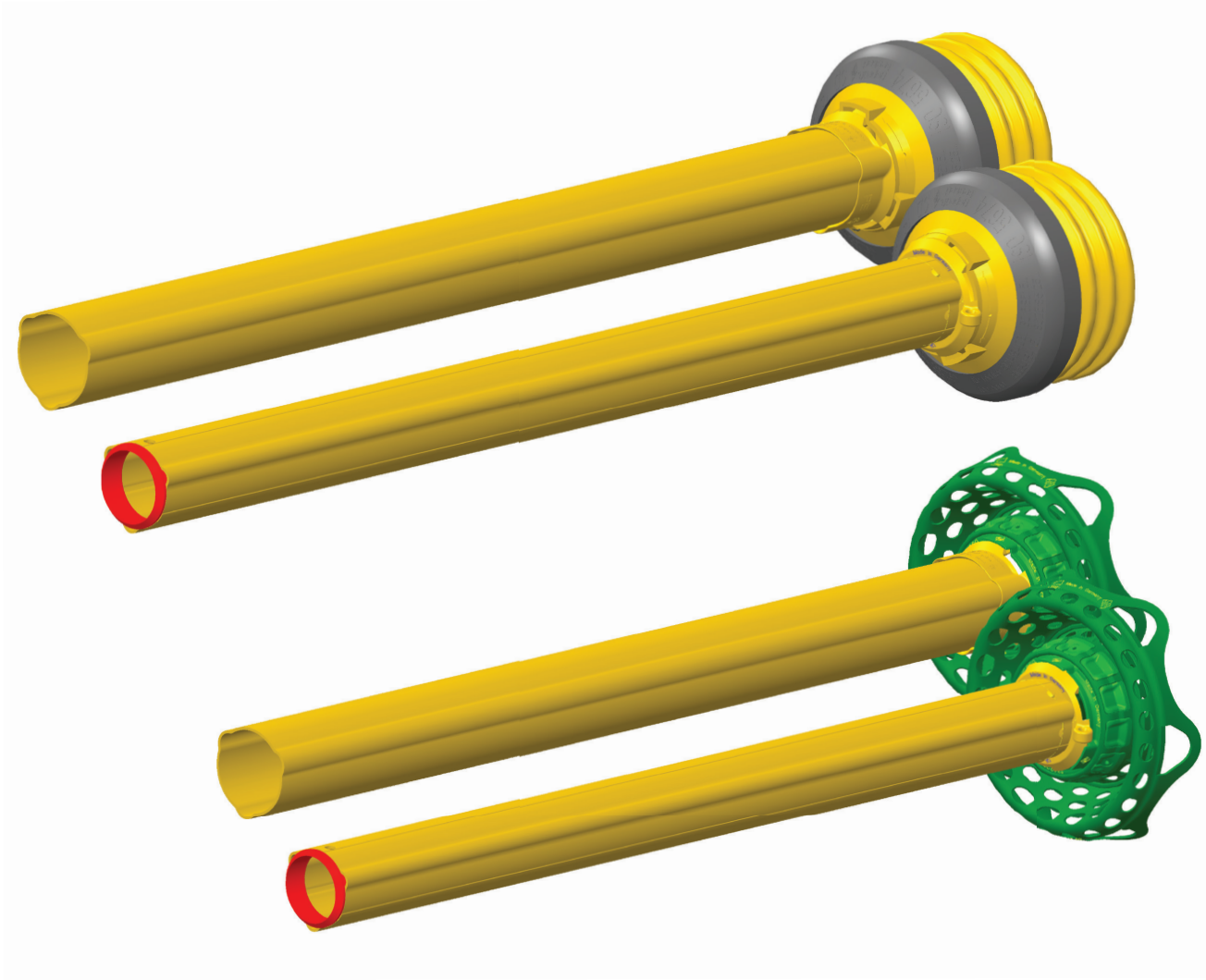

WALTERSCHEID POWERTRAIN GROUP

Walterscheid GmbH | Hauptstraße 150 | D-53797 Lohmar
Tel.: +49 2246 12-0 | Fax: +49 2246 12-3501
E-Mail.: info@www.walterscheid-group.com | www.walterscheid-group.com

GUARD-COMPONENTS

ST15-Guard - Components Series W und WW

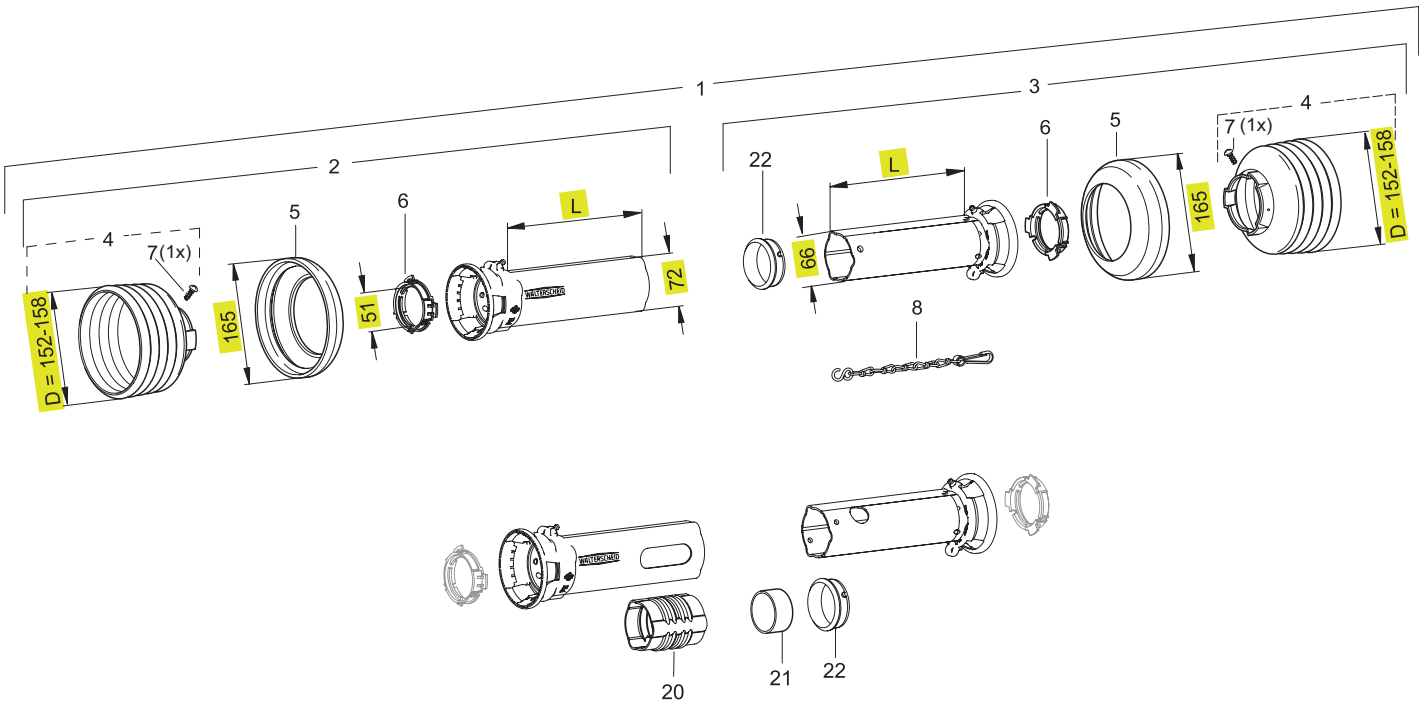

ST15 GUARD FOR SERIES W2100 / 2200 /2300

Item	Designation	Guard	D	n[1)]	L	Drawing-No.	Part-No.
			[mm]		[mm]		
1	Guard kpl.	ST15	158	6	550	-	-
1	Guard kpl.	ST15	158	6	1000	-	-
2	Outer guard half	STH15	158	6	550	-	1113636
2	Outer guard half	STH15	158	6	1000	-	1113637
2	Outer guard half	STH15	158	6	1500	-	1113638
2	Outer guard half	STH15	152	12	1000	-	1113639
3	Inner guard half	STH15Z	158	6	550	-	1113640
3	Inner guard half	STH15Z	158	6	1000	-	1113641
3	Inner guard half	STH15Z	158	6	1500	-	1113642
3	Inner guard half	STH15Z	152	12	1000	-	1113643
4	Guard cone	SC15	158	6	132	85.15.116	1199871
4	Guard cone	SC15	152	12	237	85.15.122	1199183
5	SD supporting ring	SD15/25	165			82.85.00	1359471
6	Sliding ring	SD15				82.83.06	1087279
7	Screw for guard cone					60.15.00	1365305
8	Safety chain				400	82.36.03	1044321
8	Safety chain				600	82.36.08	1382078
20	Lubrication hole covers	ST15				87.64.101	1605034
21	Supporting ring for intermediate bearing	SD15Z	51			16.20.74	1381621
22	Sliding ring for intermediate bearing	SD15Z	56			82.83.106	1355154

1) n = Number of ribs

WALTERSCHEID POWERTRAIN GROUP
Walterscheid GmbH | Hauptstraße 150 | D-53797 Lohmar
Tel.: +49 2246 12-0 | Fax: +49 2246 12-3501
E-Mail.: info@www.walterscheid-group.com | www.walterscheid-group.com

WALTERSCHEID

GUARD-COMPONENTS

ST15-Guard - Components Series W und WW

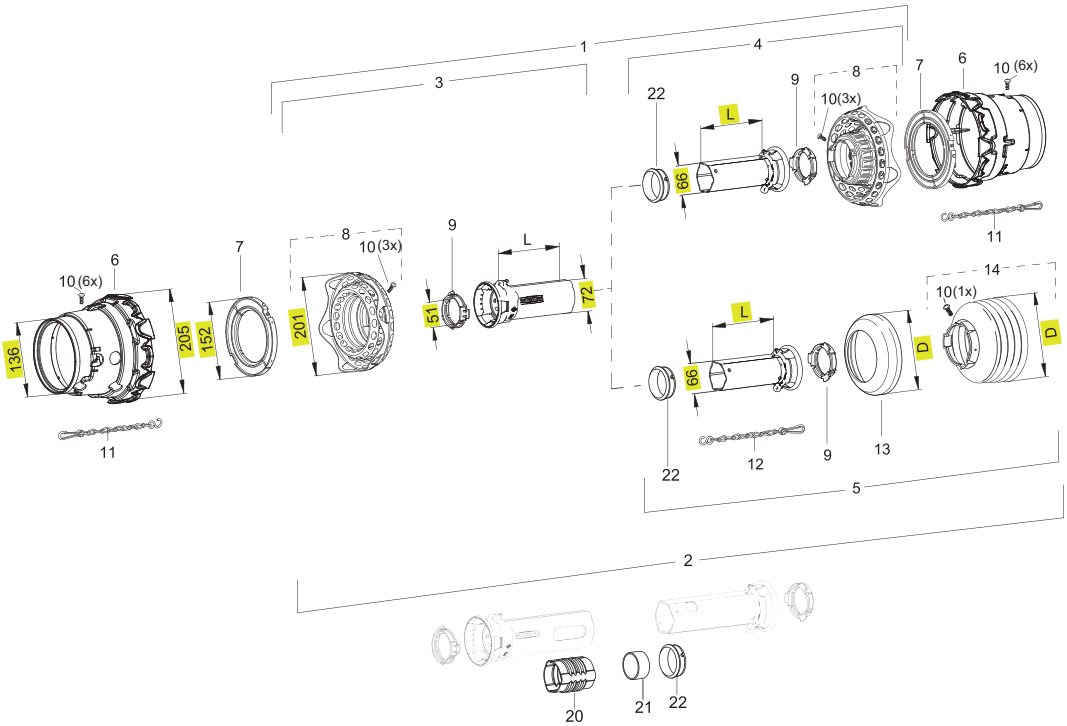

STF15 GUARD FOR SERIES WWE / WWZ 2280 WITH FLEXO CONE

Item	Designation	Guard	D	n[1)]	L	Drawing-No.	Part-No.
			[mm]		[mm]		
1	Guard kpl.	STF15	195		1000	-	-
2	Guard kpl.	STF15	195		1000	-	-
3	Outer guard half	STFH15	195		1000	-	1113600
3	Outer guard half	STFH15	195		1500	-	1113602
4	Inner guard half	STFH15Z	195		1000	-	1113601
4	Inner guard half	STFH15Z	195		1500	-	1113603
5	Inner guard half	STH15Z	158	6	1000	-	1113641
5	Inner guard half	STH15Z	152	12	1000	-	1113643
5	Inner guard half	STH15Z	158	6	1500	-	1113642
6	Guard cone	STF15	205		164	85.01.00	1134399
7	Sliding ring for wide angle	SD05/15	152			82.83.12	1365716
8	Flexo cone	SDF15	201			85.15.62	1134845
9	Sliding ring	SD15				82.83.06	1087279
10	Screw for guard cone					60.15.00	1365305
11	Safety chain				600	82.36.08	1382078
12	Safety chain				400	82.36.03	1044321
13	SD supporting ring	SD15/25	165			82.85.00	1359471
14	Guard cone	SC15	158	6	132	85.15.116	1199871
14	Guard cone	SC15	152	12	237	85.15.122	1199183
20	Lubrication hole covers	ST15				87.64.101	1605034
21	Supporting ring for intermediate bearing	SD15Z	51			16.20.74	1381621
22	Sliding ring for intermediate bearing	SD15Z	56			82.83.106	1355154

1) n = Number of ribs

WALTERSCHEID POWERTRAIN GROUP
Walterscheid GmbH | Hauptstraße 150 | D-53797 Lohmar
Tel.: +49 2246 12-0 | Fax: +49 2246 12-3501
E-Mail.: info@www.walterscheid-group.com | www.walterscheid-group.com

WALTERSCHEID

GUARD-COMPONENTS

ST15-Guard - Components Series W und WW

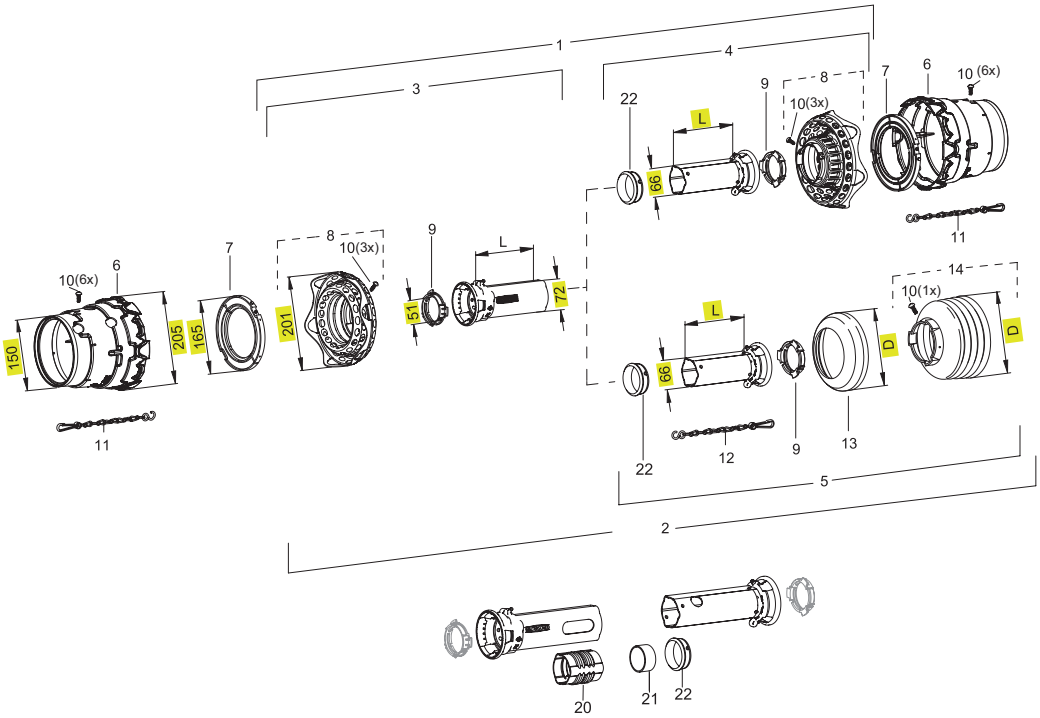

STF15 GUARD FOR SERIES WWE / WWZ 2280 WITH FLEXO CONE

Item	Designation	Guard	D	n[1)]	L	Drawing-No.	Part-No.
			[mm]		[mm]		
1	Guard kpl.	STF15	195		1000	-	-
2	Guard kpl.	STF15	195		1000	-	-
3	Outer guard half	STFH15	195		1000	-	1113600
3	Outer guard half	STFH15	195		1500	-	1113602
4	Inner guard half	STFH15Z	195		1000	-	1113601
4	Inner guard half	STFH15Z	195		1500	-	1113603
5	Inner guard half	STH15Z	158	6	1000	-	1113641
5	Inner guard half	STH15Z	152	12	1000	-	1113643
5	Inner guard half	STH15Z	158	6	1500	-	1113642
6	Guard cone	SDF15	205		186	85.01.01	1134400
7	Sliding ring for wide angle	SD15/25	165			82.83.13	1365717
8	Flexo cone	SDF15	201			85.15.62	1134845
9	Sliding ring	SD15				82.83.06	1087279
10	Screw for guard cone					60.15.00	1365305
11	Safety chain				600	82.36.08	1382078
12	Safety chain				400	82.36.03	1044321
13	SD supporting ring	SD15/25	165			82.85.00	1359471
14	Guard cone	SC15	158	6	132	85.15.116	1199871
14	Guard cone	SC15	152	12	237	85.15.122	1199183
20	Lubrication hole covers	ST15				87.64.101	1605034
21	Supporting ring for intermediate bearing	SD15Z	51			16.20.74	1381621
22	Sliding ring for intermediate bearing	SD15Z	56			82.83.106	1355154

1) n = Number of ribs

WALTERSCHEID POWERTRAIN GROUP
Walterscheid GmbH | Hauptstraße 150 | D-53797 Lohmar
Tel.: +49 2246 12-0 | Fax: +49 2246 12-3501
E-Mail.: info@www.walterscheid-group.com | www.walterscheid-group.com